ADVANCED DECKING RANGE INSTALLATION GUIDE

VERSION 1.6

Wood. Evolved.

CONTENTS

DECK PLANNING Page 4

DECK PREPARATION Page 6

MATERIALS Page 8

STANDARD INSTALLATION - QUICKLOCK CLIP & TRULOCK CLIP

INSTALLATION STEPS Page 10

BREAKER BOARDS Page 12

PICTURE FRAMING THE DECK Page 13

FINAL BOARD INSTALLATION Page 14

FASCIA BOARD INSTALLATION Page 14

BAL-29 INSTALLATION

INSTALLATION STEPS Page 16

BREAKER BOARDS Page 18

PICTURE FRAMING THE DECK Page 19

FINAL BOARD INSTALLATION Page 20

FASCIA BOARD INSTALLATION Page 20

CARE GUIDE & MAINTENANCE Page 21

WOOD.EVOLVED.

WELCOME TO WOOD. EVOLVED.

Congratulations on your new WoodEvo deck!

Your deck has been carefully engineered to provide years of maintenance-free enjoyment for you and your family. Please follow this installation guide carefully to ensure that your deck is correctly and safely installed.

DISCLAIMER

- The product is intended to have natural variations in colour, texture, and dimension to replicate natural products. Variation may occur from batch to batch which can be more perceptible in solid colours and more pronounced in lighter shades.
- To ensure visual consistency, WoodEvo strongly recommends that the total quantity required for a project be procured in a single order, as products of varying lengths or those purchased at different intervals are likely to originate from disparate production batches.
- It is the responsibility of the installer or purchaser to inspect all materials for batch consistency prior to installation. Please be advised that batch variations are characteristic of the manufacturing process; they do not constitute a product defect and are expressly excluded from warranty coverage
- When installing decking, always comply with the National Construction Code, Building Code of Australia, as well as all applicable Australian Standard and local building codes.
- All instructions in this document are provided for illustration purposes only and are not intended to replace the expertise of a licensed professional.
- WoodEvo assumes no responsibility for any risks and/or liability associated with the use of WoodEvo products during construction.

SAFETY INSTRUCTIONS

- The use of personal protective equipment (PPE) and all applicable safety equipment is required during any type of construction work.
- When working with WoodEvo decking you should always wear appropriate gloves, respiratory protection (or dust mask), long sleeves, and safety glasses.
- Standard woodworking tools can be used with WoodEvo decking. Please ensure you take appropriate steps to ensure all tools are used safely.
- Static electricity advisory: it is normal for static electricity to occasionally build up in plastic-based products. This phenomenon is rare and is typically more noticeable in dry conditions.

HEAT & FIRE CONSIDERATIONS

WoodEvo products could potentially be damaged by contact with strong heat sources such as, but not limited to, fire, or the reflection of sunlight from energy-efficient window products. Please ensure you consider such risks when planning the location and configuration of your deck.

DECK PLANNING

For best results, it is important to carefully plan the placement and installation of your deck. This starts with ensuring your subframe is correctly prepared.

SUBFRAME PREPARATION

To be correctly installed, WoodEvo decking must be laid on a clean, smooth, strong, and flat surface. Before starting installation, plan your subframe so joist spacings comply with the following table.

400mm joist spacings are recommended for our 140mm boards to achieve the best results in residential installations (when running perpendicular to joists). Our 200mm boards is commercially rated to 450mm centres.

SUBFRAME JOIST CENTRES

APPLICATION	ANGLE OF DECK BOARDS RELATIVE TO JOISTS		
	90° (Perpendicular)	60°	45°
Residential 140mm (recommended)	400mm	350mm	300mm
Commercial 140mm (recommended)	350mm	300mm	250mm
Residential & Commercial 200mm (recommended)	450mm	400mm	350mm

Always use joist hangers (in accordance with applicable building codes) for a strong base to your deck.

EDGE BOARD CONSIDERATIONS

Routing Instructions:
Avoid routing boards, with the exception of creating grooves in the square board for clip installation, (if required). This maintains the material's strength and ensures the validity of your warranty.

PLANNING FOR EXPANSION AND CONTRACTION

If your deck is longer than a full board, it is strongly recommended that you plan your deck to include breaker boards rather than butt joints.

As ambient temperatures fluctuate, composite decking boards naturally experience thermal expansion and contraction along the length of the board. The width of the board will not expand or contract. To counteract this, it is best practice to install a QuickLock or TruLock clip in the middle of each board to ensure even expansion at either side of the clip. This will also prevent boards from physically moving.

Depending on the ambient temperature experienced during installation, the minimum total gap to be left between board ends is as follows:

MINIMUM GAP BETWEEN BOARDS

BOARD LENGTH	AMBIENT TEMPERATURE DURING INSTALLATION			
	15°C	20°C	25°C	30°C
1800mm	2mm	2mm	1mm	1mm
2700mm	2mm	2mm	1mm	1mm
3600mm	3mm	2mm	1mm	1mm
5400mm	4mm	3mm	2mm	1mm

The table above shows the gap to be left between the cut end of a board and the breaker board it is perpendicular to. The boards will expand in length when the ambient temperature increases and will contract as the ambient temperature decreases.

It is strongly recommended that breaker boards are used to maintain an even gap for the life of the deck. If butt joints are used, uneven gaps may appear at certain ambient temperatures.

If you do use butt joints, add the gap shown for each length in the table above to allow for the expansion and contraction of both boards.

Eg. If you have a 5.4m length butting into a 2.7m length and the ambient temperature is 20°C, the gap left should be 5mm (3mm + 2mm)

OTHER PLANNING CONSIDERATIONS

WoodEvo decking must have a minimum ground clearance of 150mm over soil and 28mm over concrete.

It is strongly recommended to install WoodEvo decking when the ambient temperature is under 30°C.

DECK PREPARATION

STORAGE & PROTECTION OF BOARDS

- Prior to installation, ensure decking boards are stored on a flat surface to prevent damage from falling or sliding.
- Protect decking boards from impact with heavy and/or sharp objects before and during installation.
- Cover decking boards with a heavy fabric (such as natural fibre canvas) when working on the deck to avoid damage.

COLOUR & GRAIN PATTERNS

WoodEvo decking is carefully designed to emulate the finish of real timber, which means slight variations in colour and grain pattern are deliberately added to enhance the natural appearance of the product. This effect is purely aesthetic and does not impact the functionality or durability of the decking.

Note:
While our decking products are engineered to be cooler to the touch when compared to other decking materials, they will still absorb ambient heat on hot days. It is normal for them to feel warm underfoot (especially darker deck colours).

PROTECTING YOUR DECK

- Leave the laying of your new deck until after all other works have been completed.
- Always cover the deck securely during installation or nearby construction.
    I. Use a breathable material (such as natural fibre canvas) to cover the deck, protecting it from dust, debris, and spills.
    II. Do not use rubber or plastic sheeting to cover the deck as it may trap moisture and/or apply direct heat, risking potential damage.
    III. Fasten the cover securely, allowing for sufficient airflow to avoid moisture buildup.
- Once construction is complete, remove the cover(s) and clean the deck thoroughly with soap and water or a pressure washer (see Care & Maintenance instructions later in this guide) to remove any leftover materials.

⚠ ATTENTION

- Do not mark the deck with oil pens or coloured pens. Do not use a chalk line as it may mark.
- Do not use nails (or a nail gun) to affix deck boards. This can compromise the deck board integrity and will void your warranty.
- Only use approved screws and/or specialised hidden fastener system(s) to install your deck. This will ensure a secure, safe, and long-lasting installation.
- Always install deck boards with the embossed side facing up. This not only ensures optimal safety due to improved anti-slip traction but also showcases the deck's grain texture.
- Each board will need to be squared off. Make sure at least 1 blade width is cut from each end of the deck board.
- Boards must be installed on a minimum of 3 joists. Example: A 450mm board with 1 joist on each end, would also require a joist in the middle.

MATERIALS

You will need the following fastener system components to complete your deck installation.

Note: All WoodEvo Clips systems are BAL-29 compliant when used with WoodEvo decking boards. Certification is based on installation over an enclosed subfloor with a maximum board spacing of 6mm. While our standard systems are compliant, we also offer 3mm clips as an option to assist in meeting any additional BAL-29 building requirements. The image below illustrates the installation method using this 3mm clip.

BOARDS

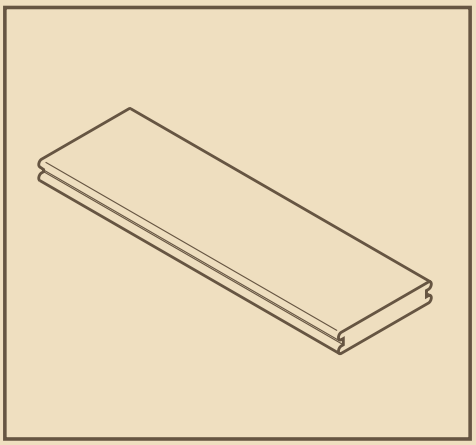

GROOVED BOARDS

Dimensions: 140mm x 25mm
200mm x 32mm

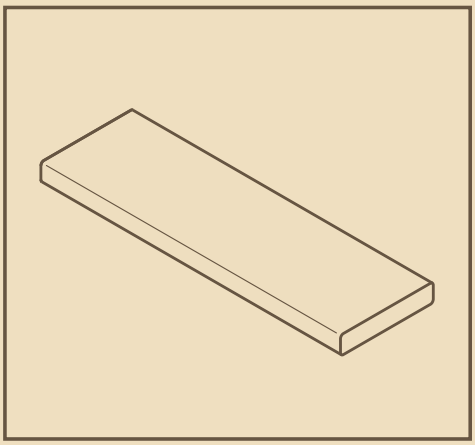

SQUARE BOARDS

Dimensions: 140mm x 25mm
200mm x 32mm

CLIPS

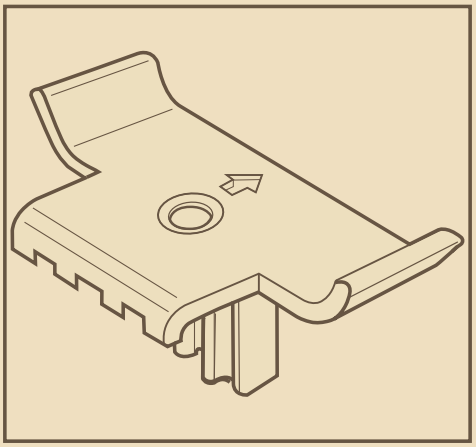

QUICKLOCK CLIPS

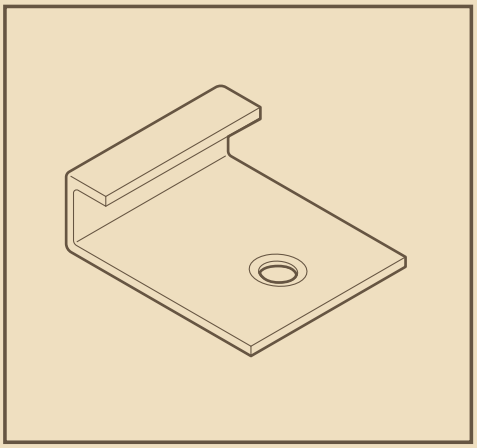

STARTER CLIPS

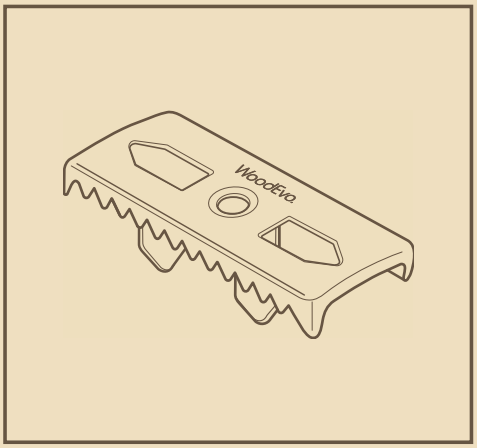

TRULOCK CLIPS

Note: All WoodEvo Clips systems are BAL-29 compliant when used with WoodEvo decking boards. Certification is based on installation over an enclosed subfloor with a maximum board spacing of 6mm. While our standard systems are compliant, we also offer 3mm clips as an option to assist in meeting any additional BAL-29 building requirements. The image below illustrates the installation method using this 3mm clip.

PLUGS

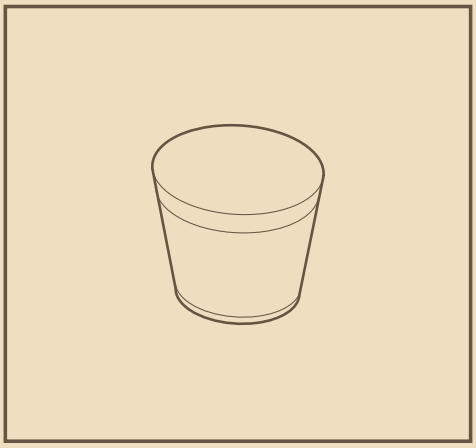

COLOUR MATCHING PLUGS

RECOMMENDED TOOLS

Drill/driver

Tape measure

Track saw

Spirit level

Set square

Small head hammer

4.2mm Drill bit
(or 4.5mm)

TIMBER SUBFRAME SCREWS

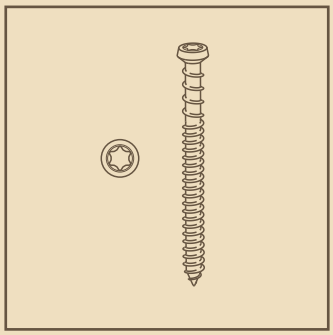

12g 65mm screws

T20 drive bit required

To be used with colour matching plugs

⃠ NO IMPACT DRIVER

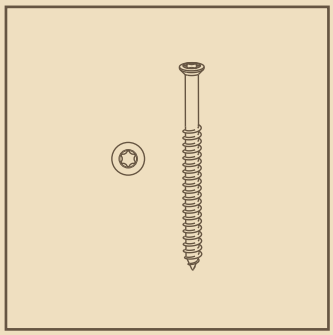

6g 45mm clip screws

Screws and T15 drive bit supplied with clip boxes

⃠ NO IMPACT DRIVER

BAL-29 RATED CLIPS

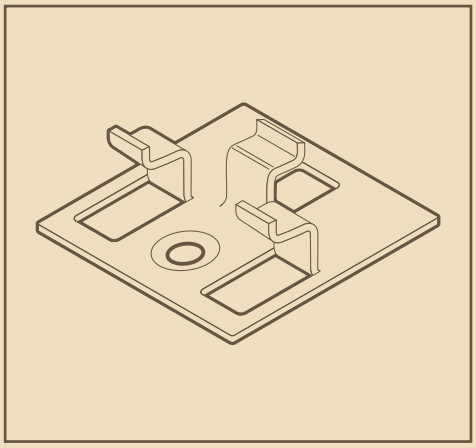

BAL-29 3MM CLIP

METAL SUBFRAME SCREWS

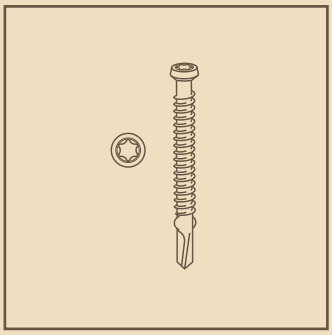

12g 45mm screws

T20 drive bit required

To be used with colour matching plugs

⃠ NO IMPACT DRIVER

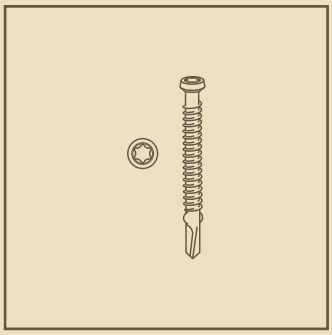

6g 32mm clip screws

Screws and T15 drive bit supplied with clip boxes

⃠ NO IMPACT DRIVER

INSTALLATION STEPS

5MM CLIP – FOR TIMBER AND METAL SUBFLOOR

Place the first board at the edge of the subframe furthest away from the structure you are building against.

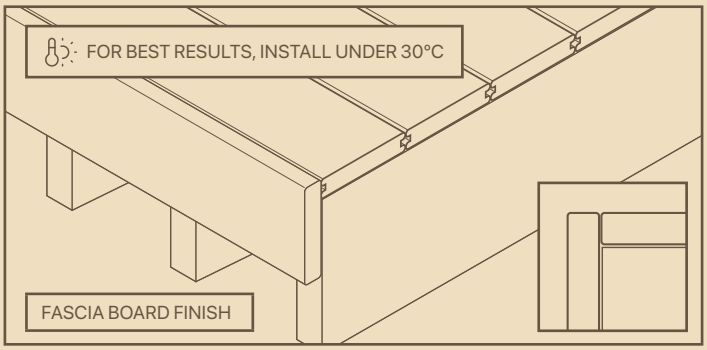

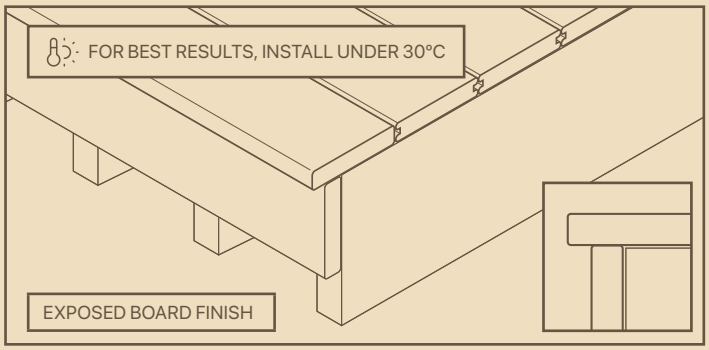

FASCIA BOARD FINISH – GROOVED BOARD:

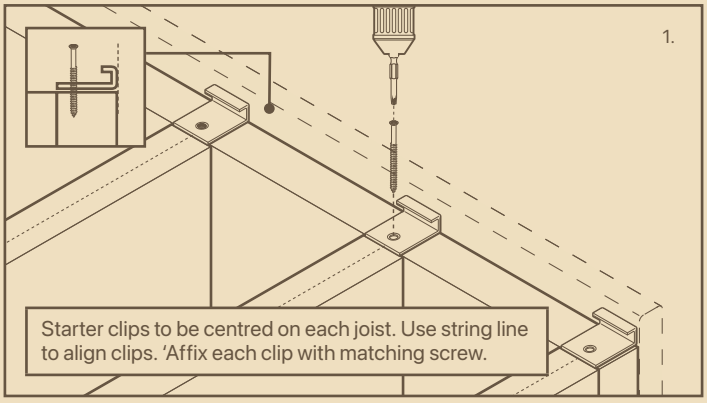

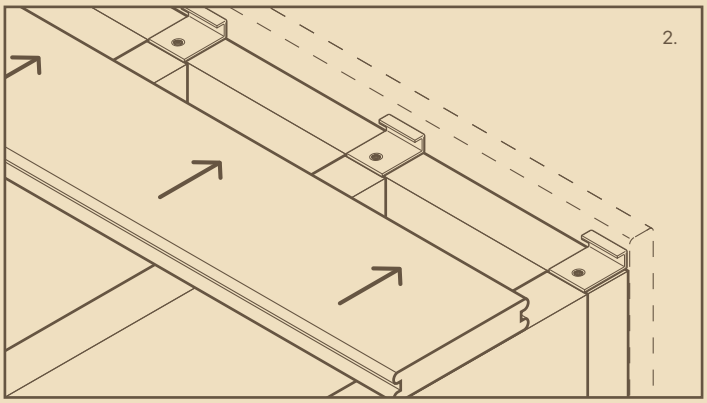

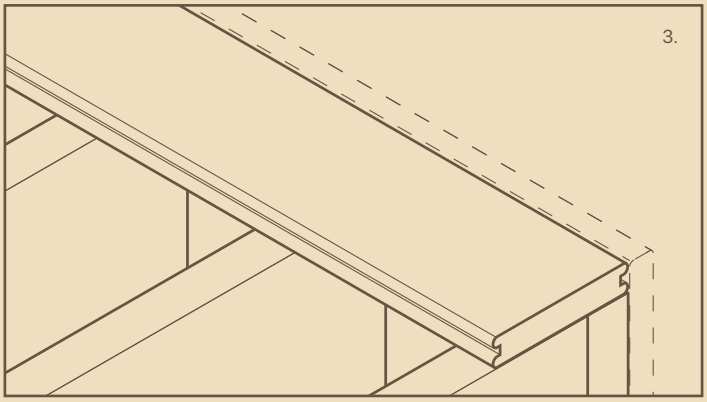

EXPOSED BOARD FINISH – EDGE BOARD:

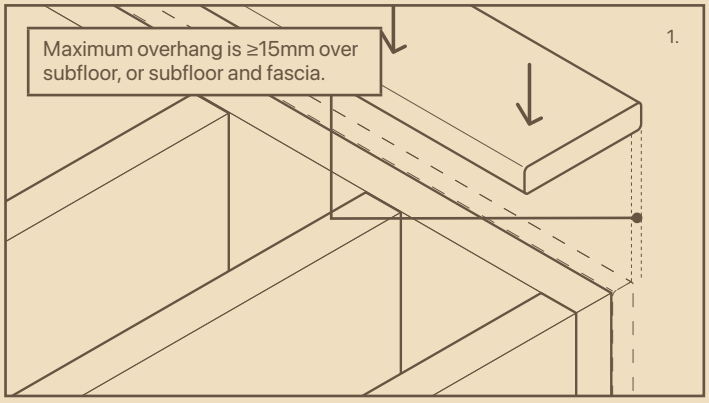

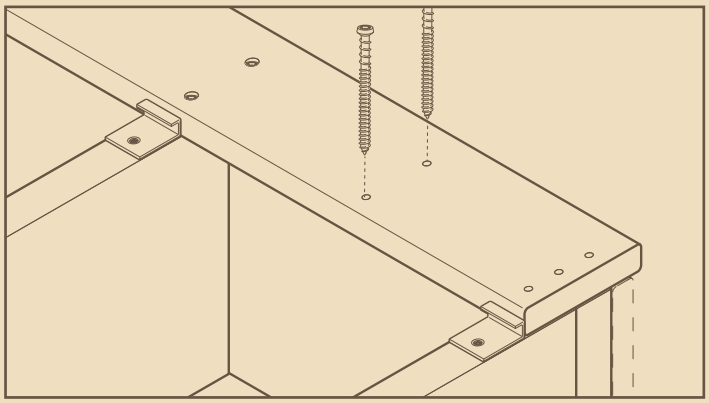

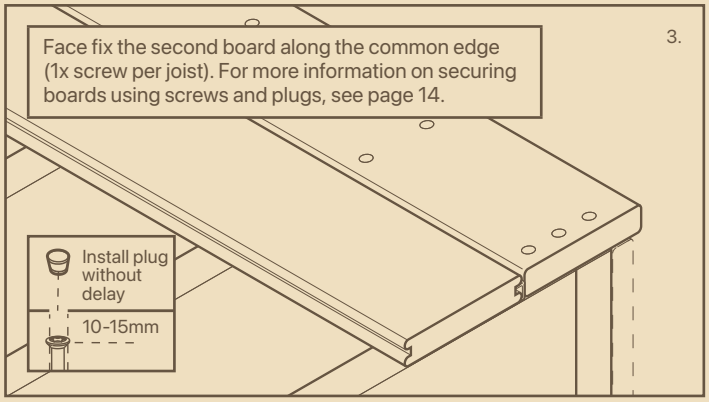

QUICKLOCK CLIP

TIMBER AND METAL SUBFLOOR

Our QuickLock Clip system is engineered for strength, speed, and reliability. Featuring a reinforced metal internal plate, each clip provides added durability and protection against breakage, ensuring a secure installation every time. Designed to streamline your workflow, QuickLock helps you complete projects faster without compromising on quality.

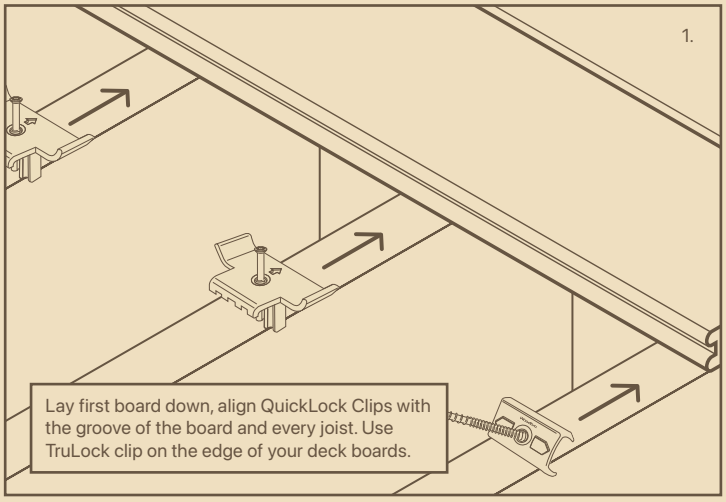

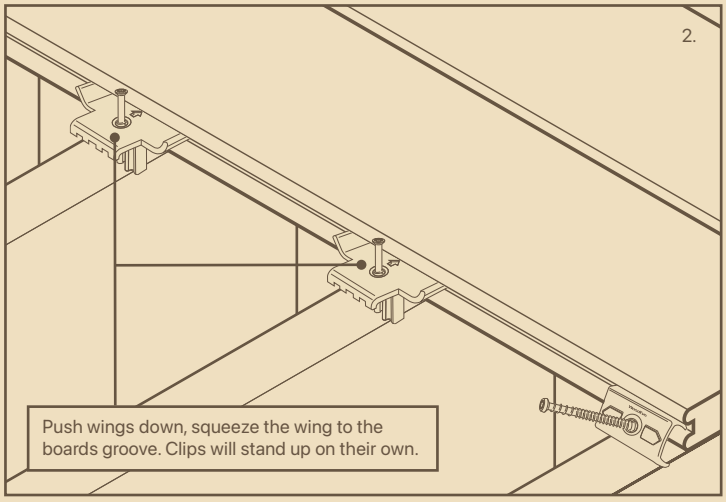

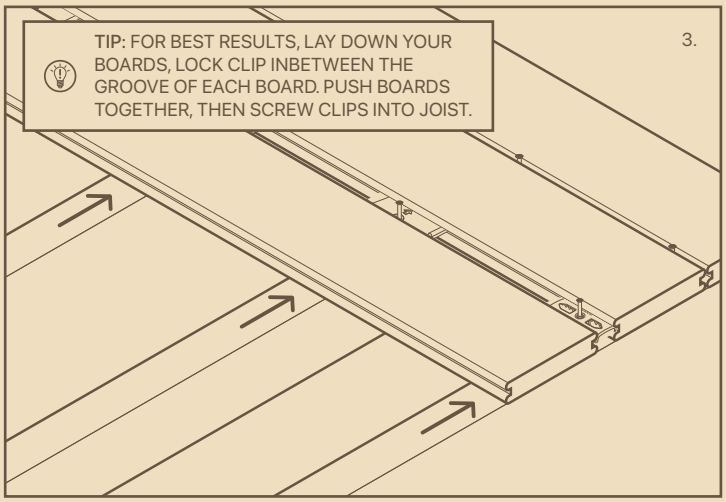

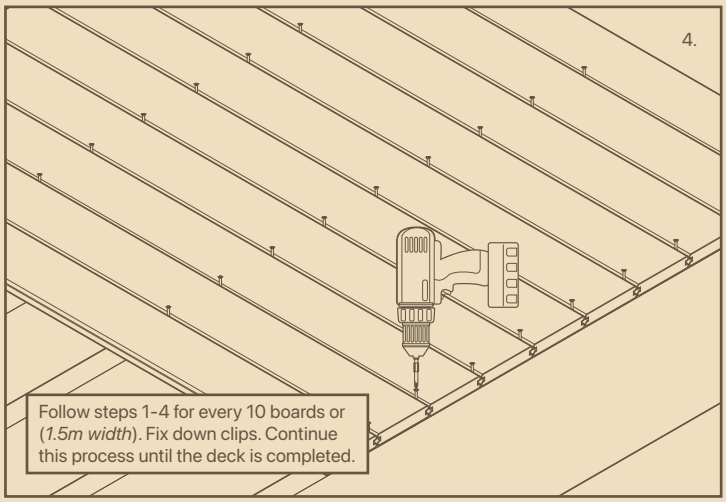

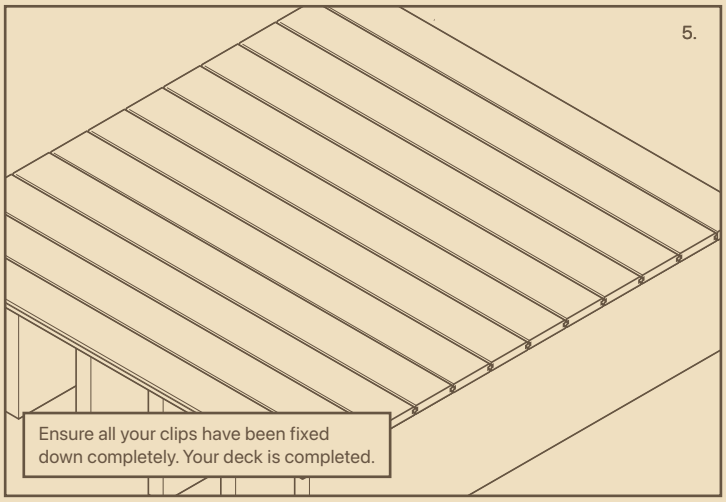

QUICKLOCK INSTALL VIDEO

TRULOCK CLIP

TIMBER AND METAL SUBFLOOR

The TruLock Clip delivers enhanced durability and a smoother installation. Designed for a stronger hold and easier board lock-down, TruLock ensures every deck is secured with confidence. It is also specifically designed for use on breaker boards, making it ideal for clean and professional deck layouts.

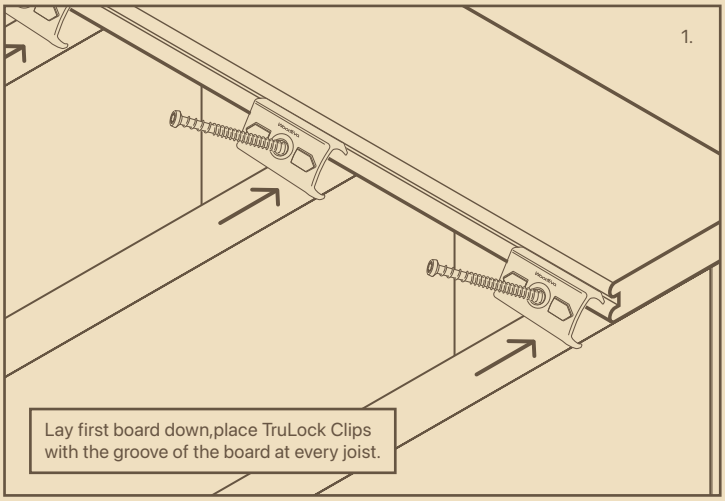

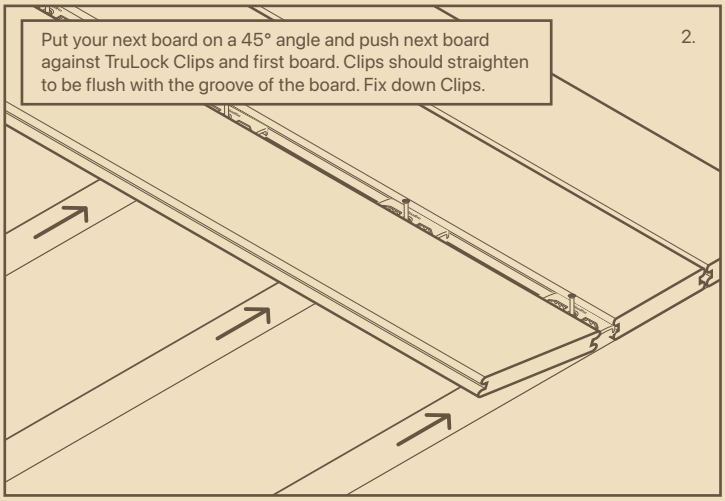

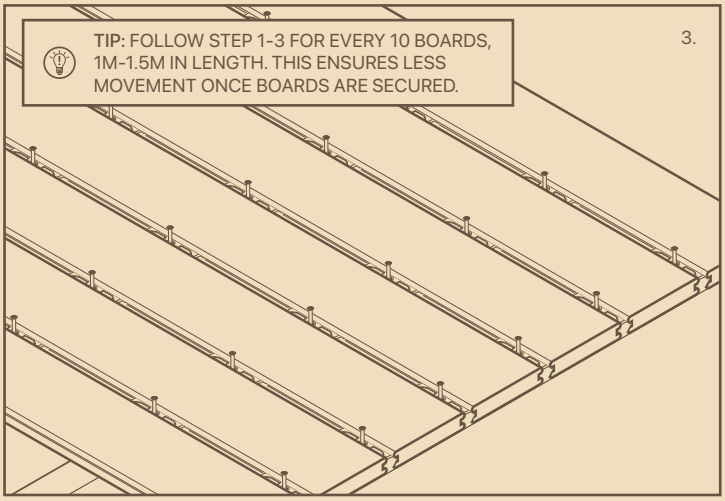

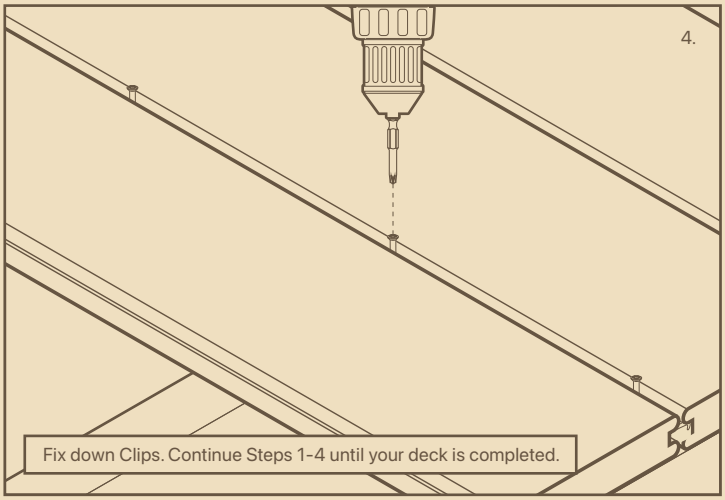

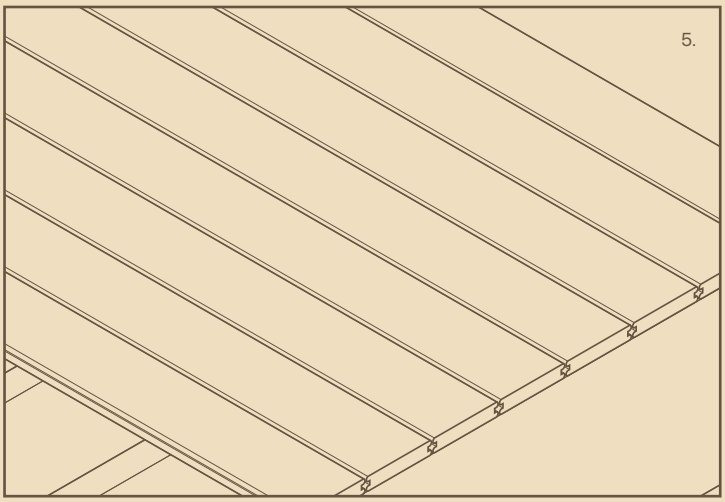

TRULOCK INSTALL VIDEO

BREAKER BOARDS

Breaker boards control linear expansion by breaking your deck into smaller, uniform spans. Breaker boards also enhance the stability and durability of your deck, while minimising wastage. Therefore, breaker boards are recommended for all WoodEvo deck installations.

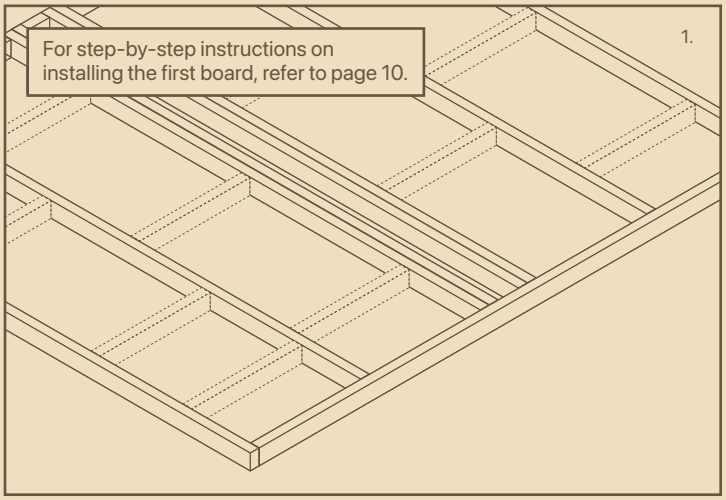

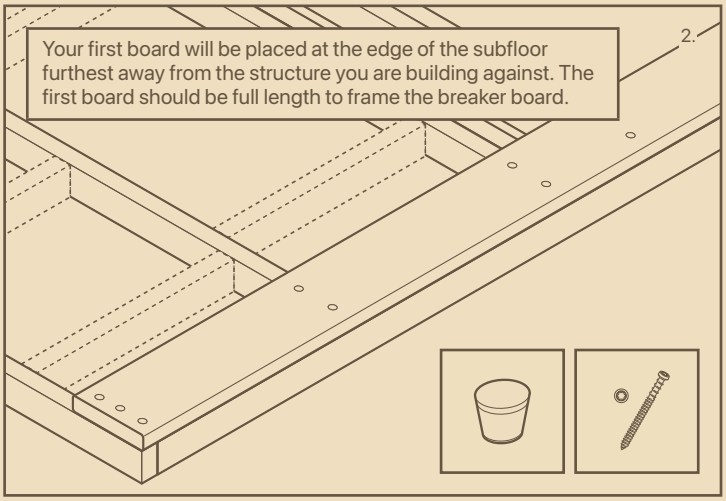

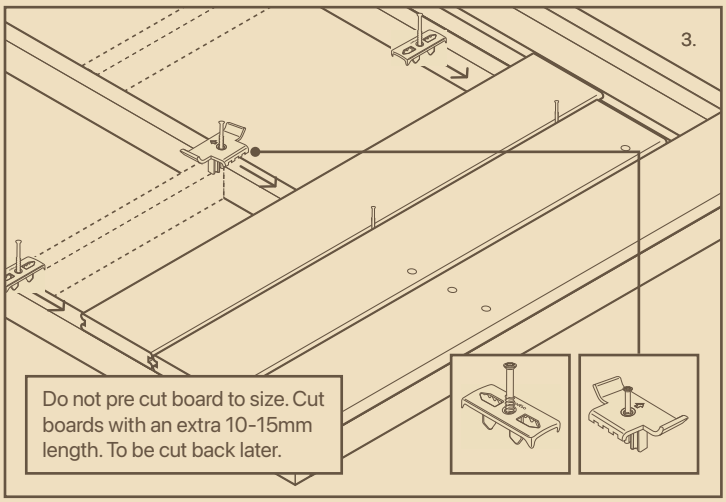

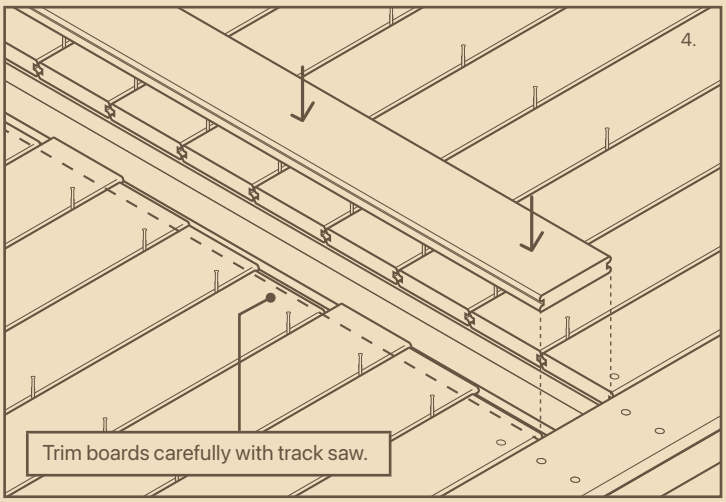

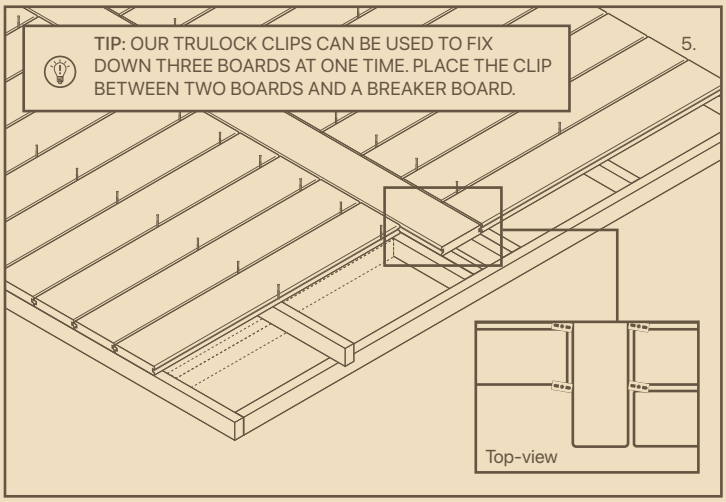

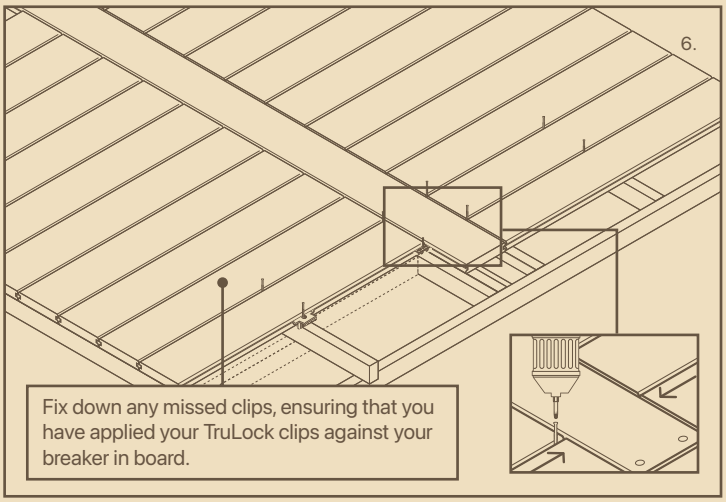

PICTURE FRAMING THE DECK

Finishing the edge(s) of your deck with a single or double picture frame will not only help hide and protect the ends of your deck boards, it will also add a beautiful finishing detail to your overall deck design. In certain circumstances it will also help you extend the size of your deck, while minimising wastage.

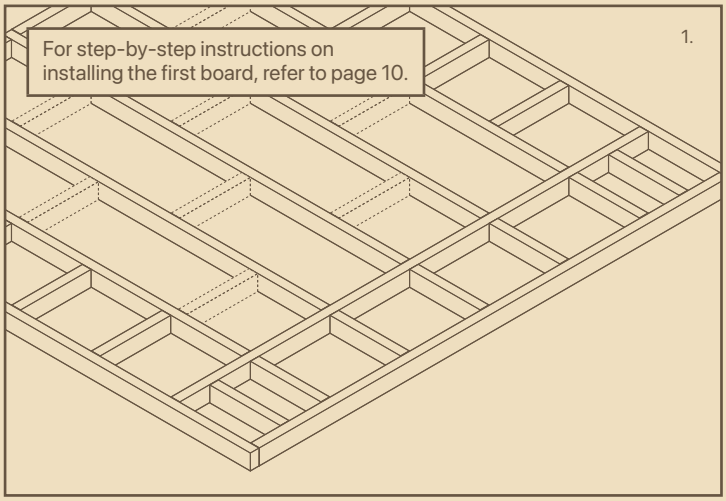

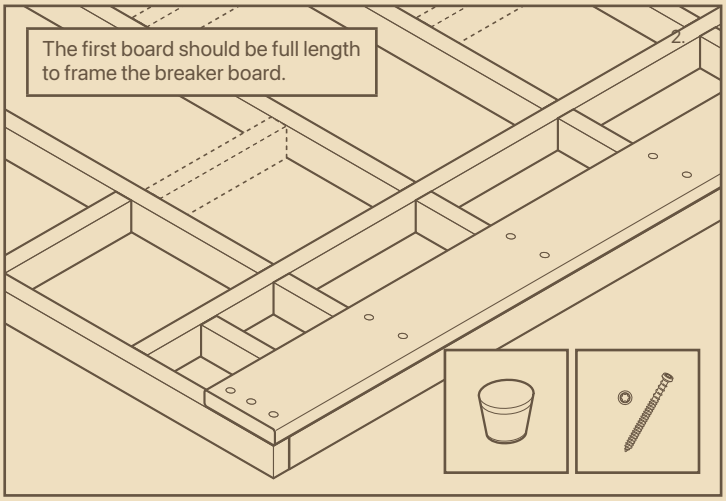

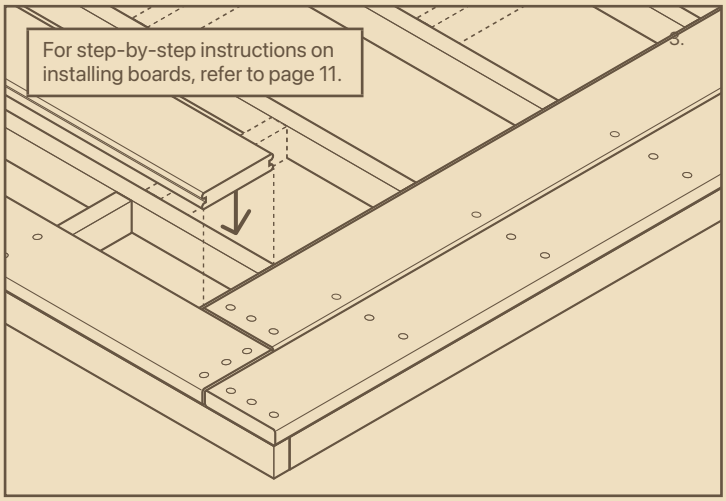

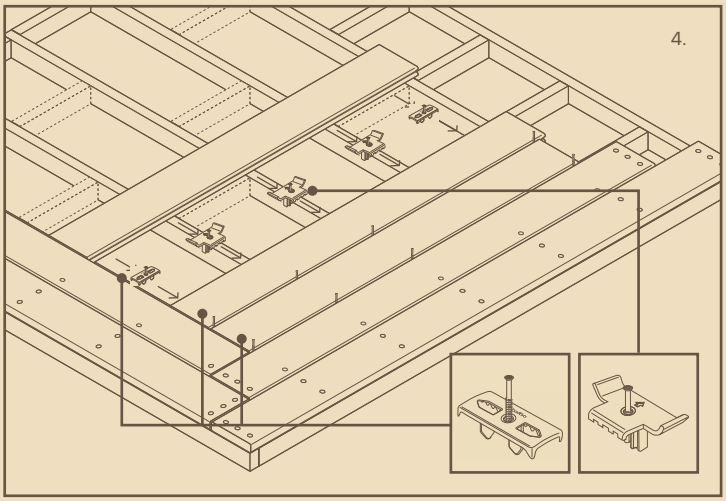

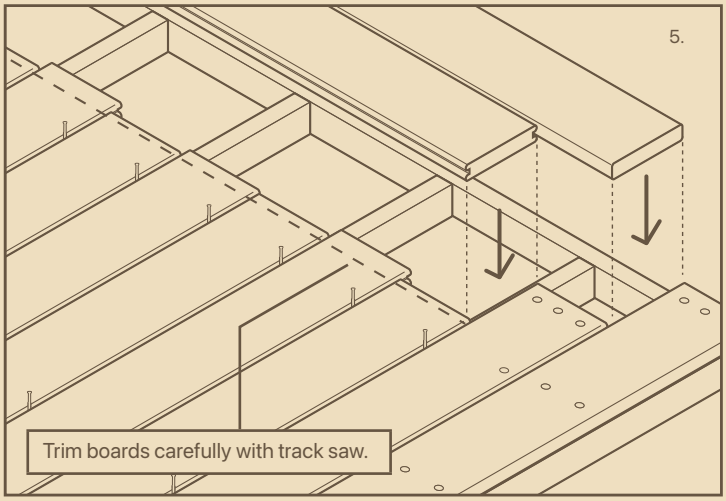

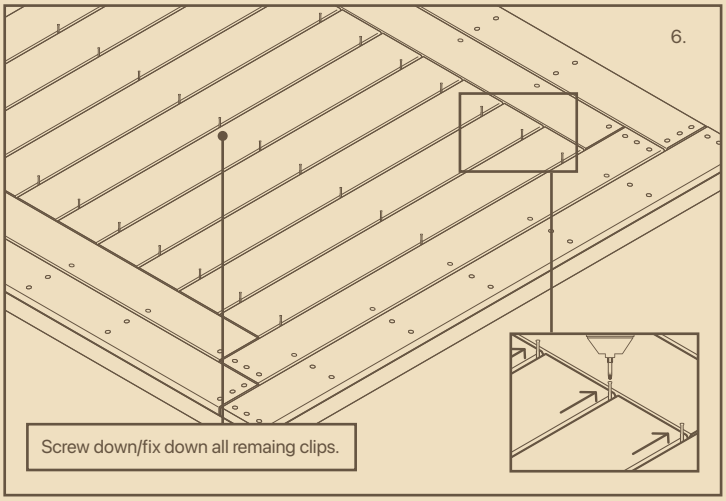

FINAL BOARD INSTALLATION

The final board will be placed at the edge of the subframe closest to the structure you are building against.

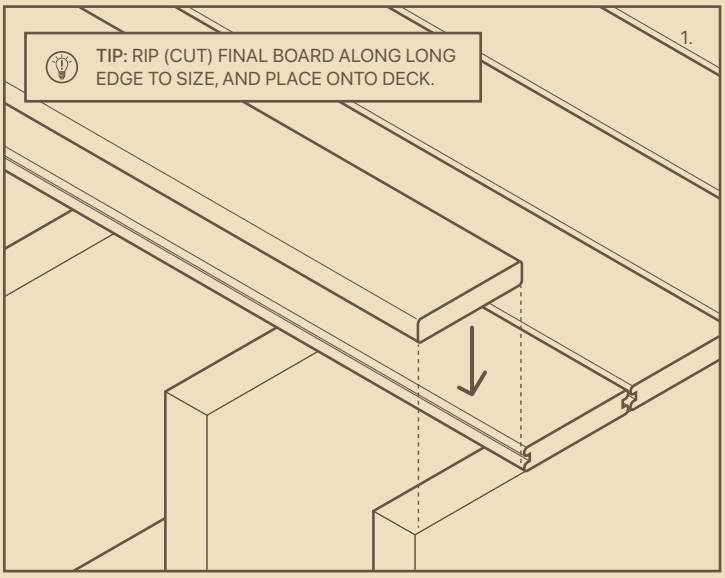

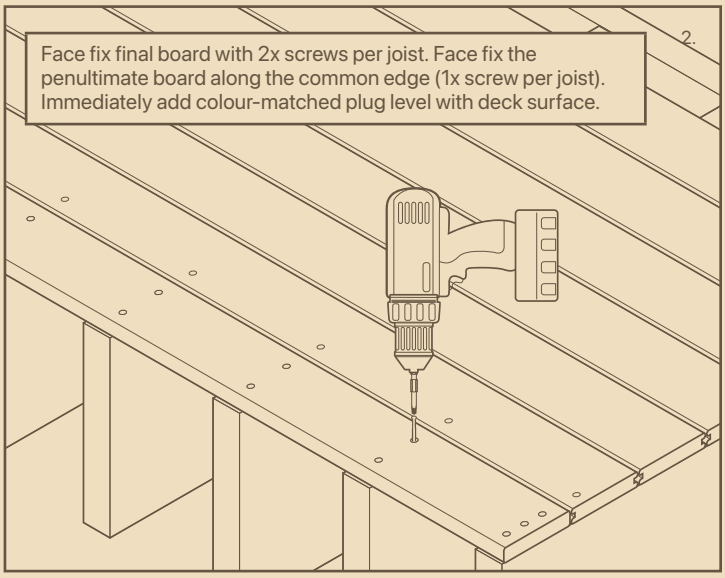

FASCIA BOARD INSTALLATION

Fascia boards are used to finish the deck and hide any grooves that are visible on the edge of the deck. Fascia boards should be attached by driving screws into the subfloor. Be careful to line up the edge of the deck with the edge of the fascia.

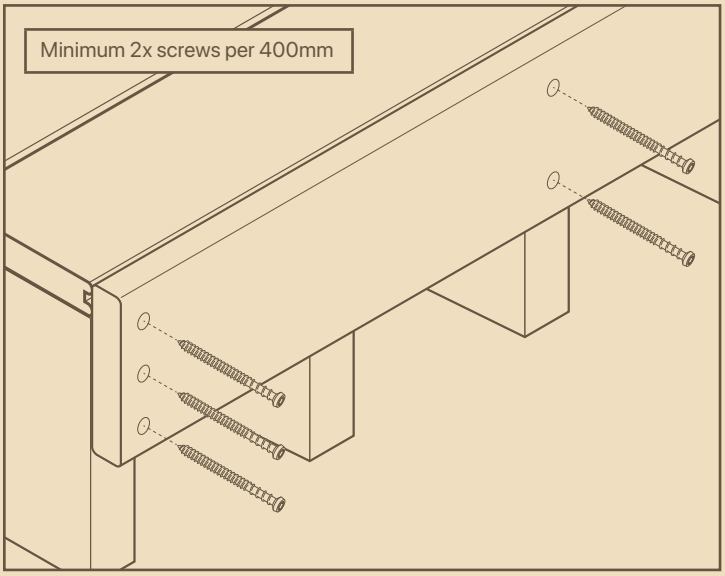

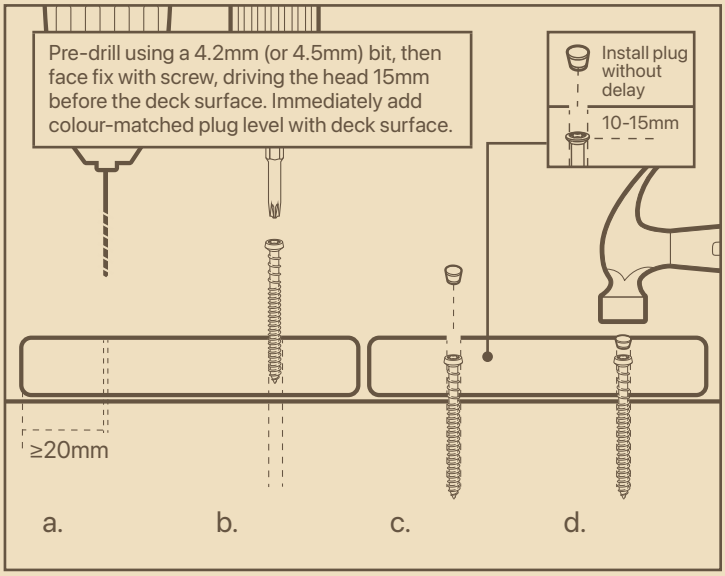

BAL-29 INSTALLATION STEPS

BAL-29 3MM CLIP – FOR TIMBER AND METAL SUBFLOOR

Place the first board at the edge of the subframe furthest away from the structure you are building against.

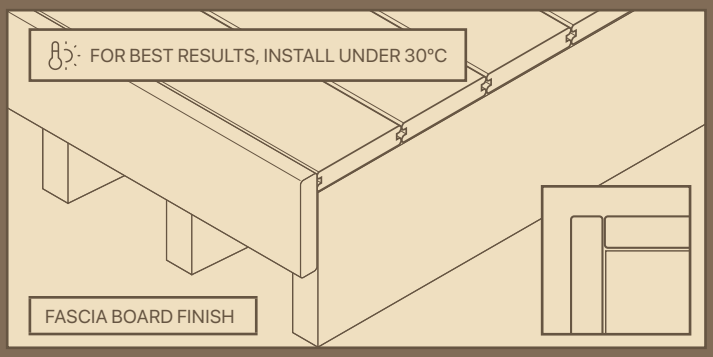

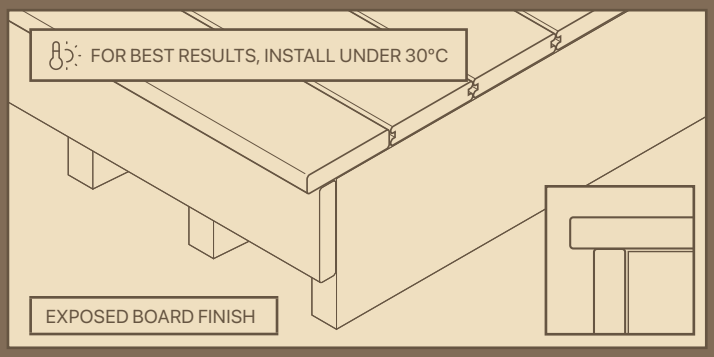

FASCIA BOARD FINISH – GROOVED BOARD:

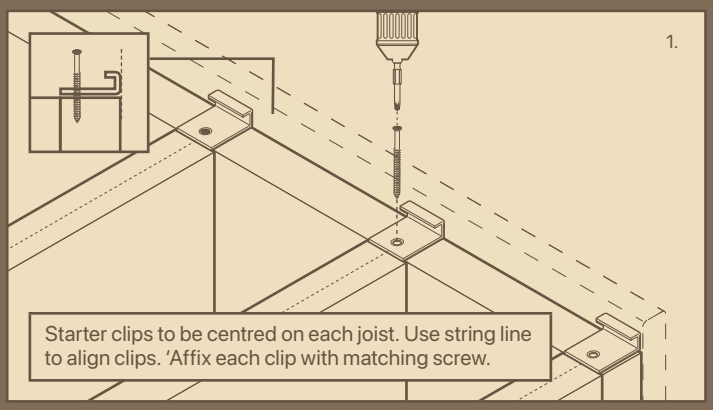

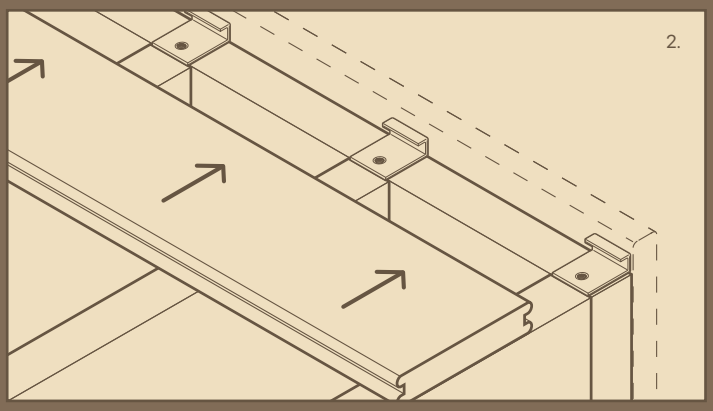

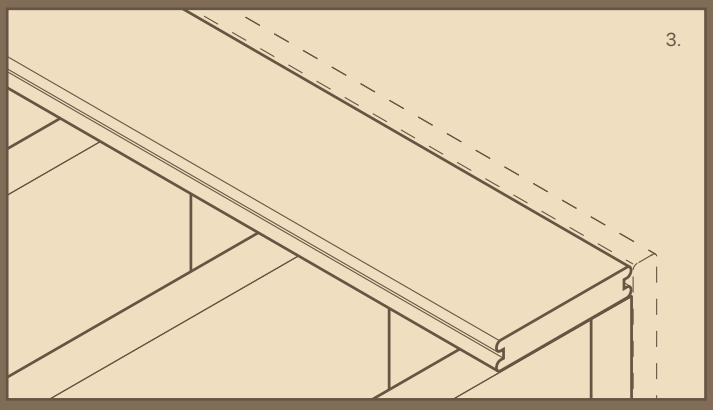

EXPOSED BOARD FINISH – EDGE BOARD:

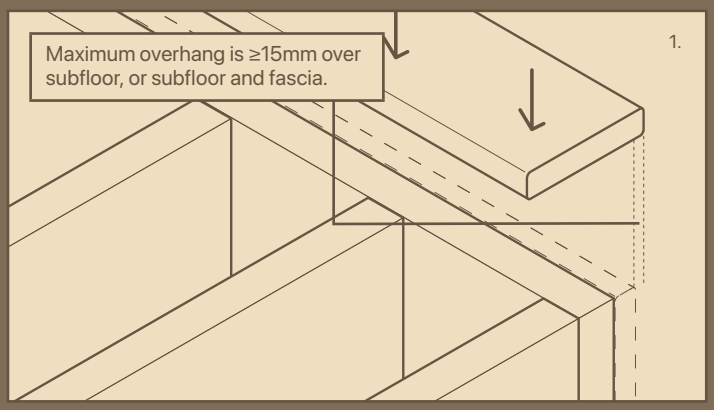

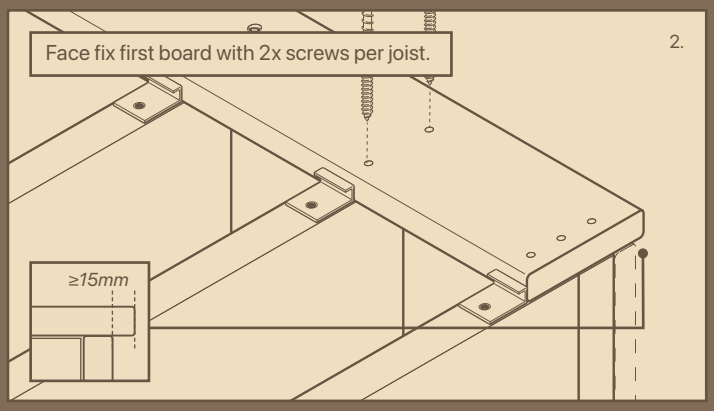

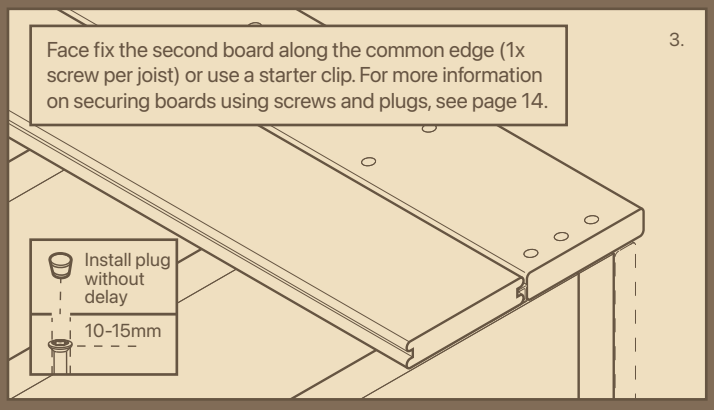

After installing the first board successfully, use the following method for all subsequent boards to complete the deck. Do not pre cut boards to size. Cut boards with an extra 10-15mm length.

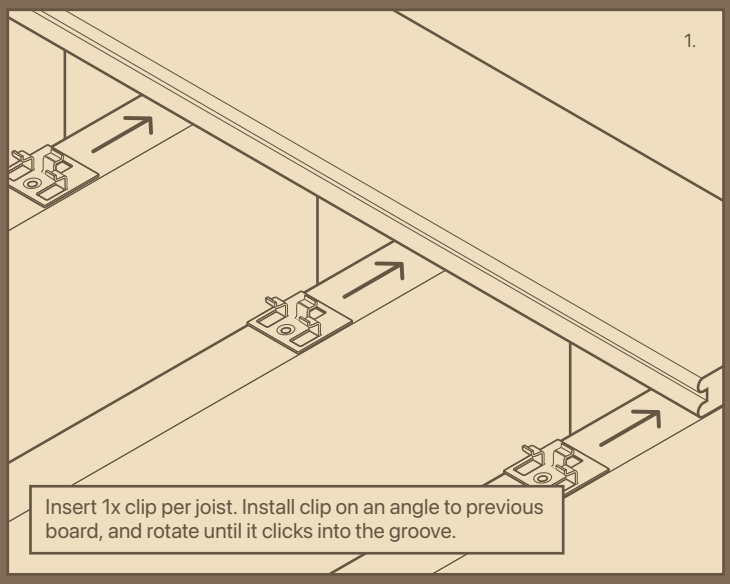

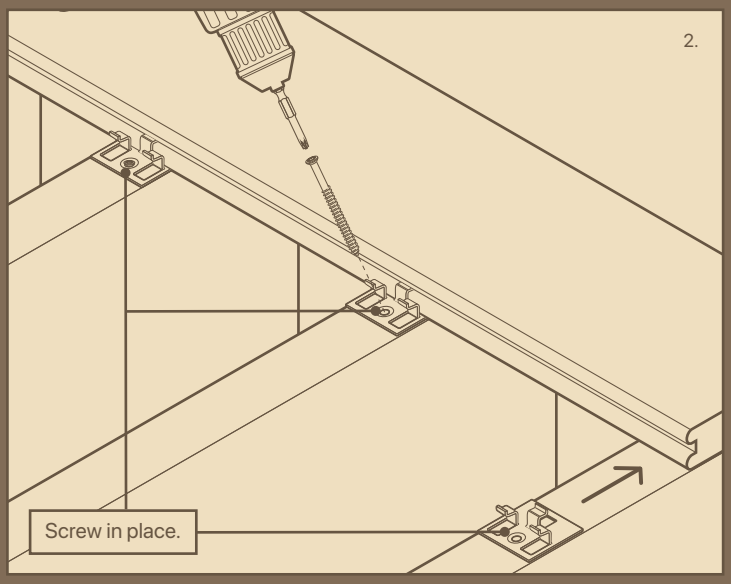

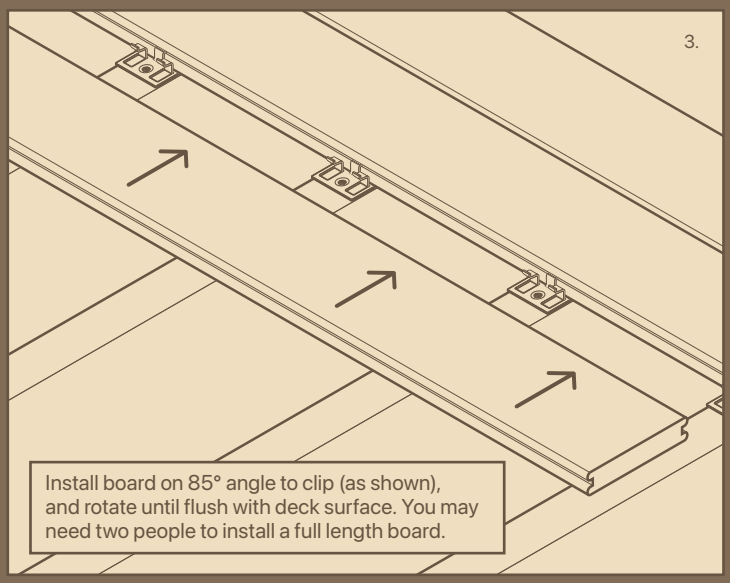

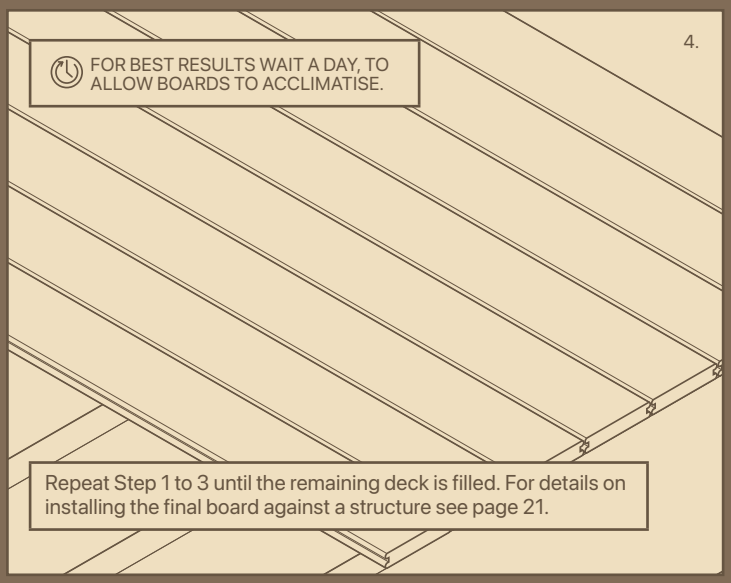

BREAKER BOARDS

BAL-29 3MM CLIP

Breaker boards control linear expansion by breaking your deck into smaller, uniform spans. Breaker boards also enhance the stability and durability of your deck, while minimising wastage. Therefore, breaker boards are recommended for all WoodEvo deck installations.

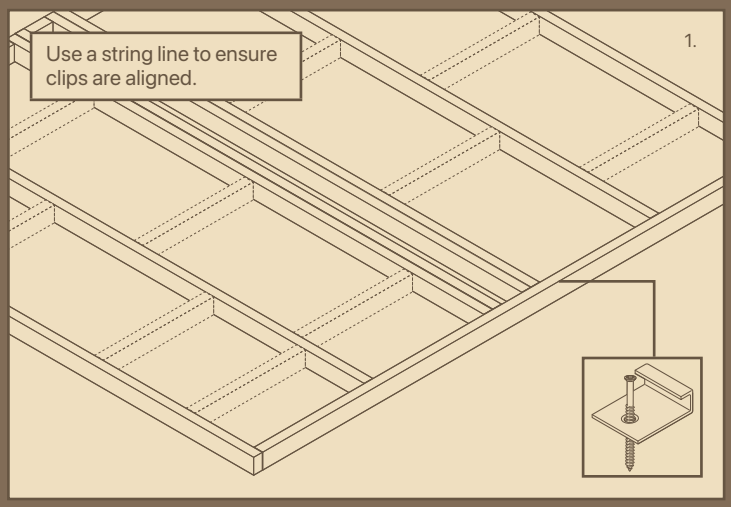

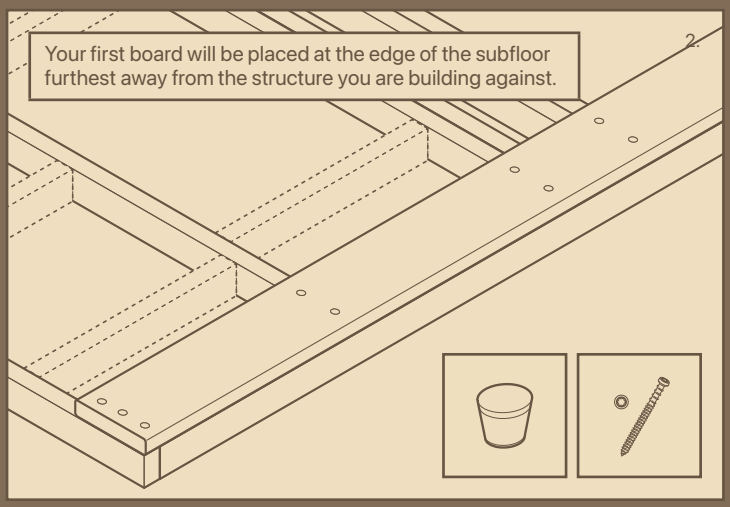

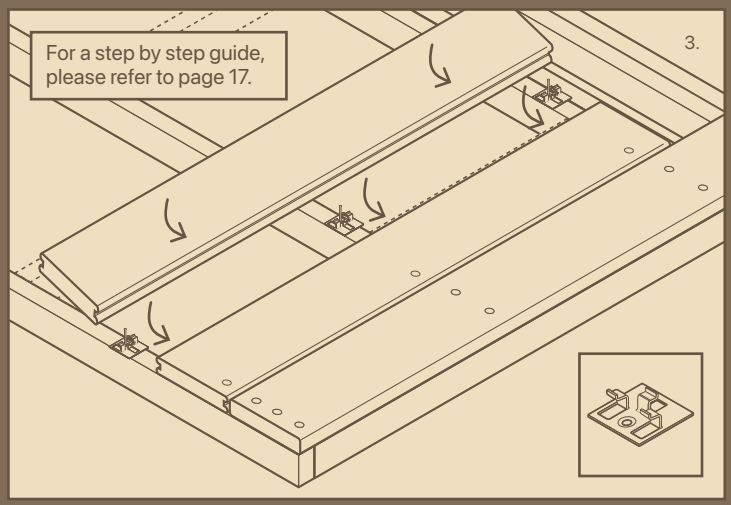

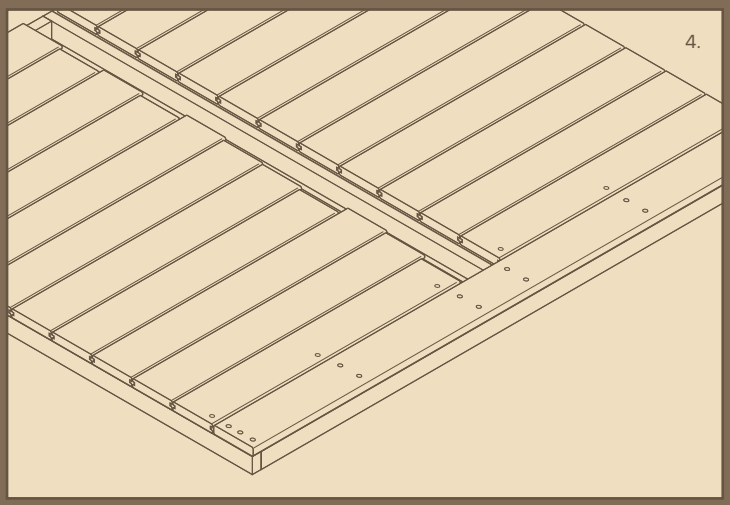

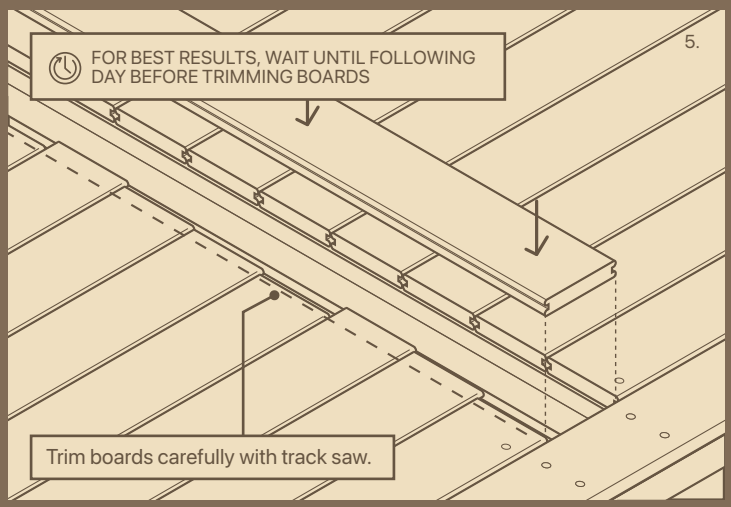

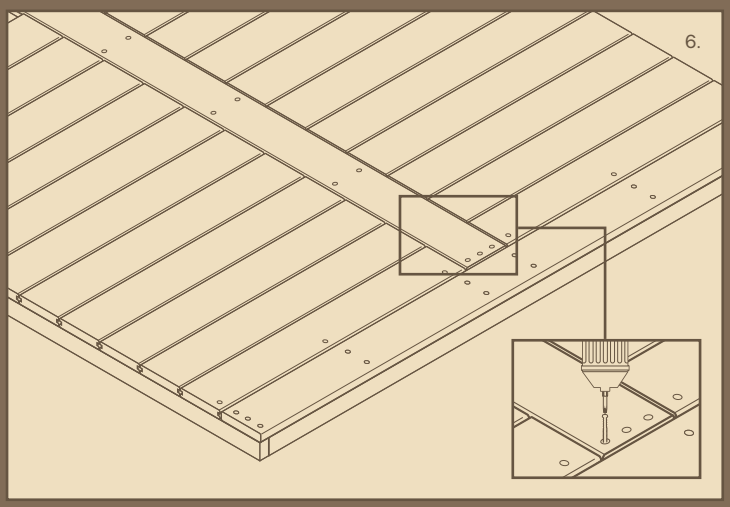

PICTURE FRAMING THE DECK

BAL-29 3MM CLIP

Finishing the edge(s) of your deck with a single or double picture frame will not only help hide and protect the ends of your deck boards, it will also add a beautiful finishing detail to your overall deck design. In certain circumstances it will also help you extend the size of your deck, while minimising wastage.

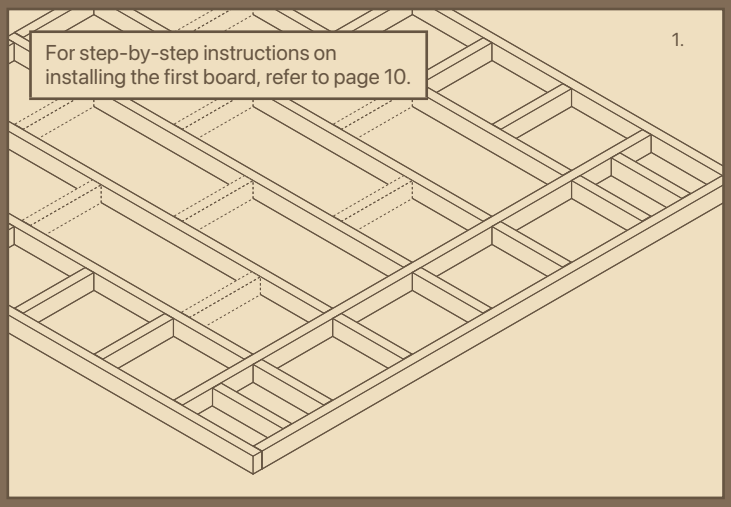

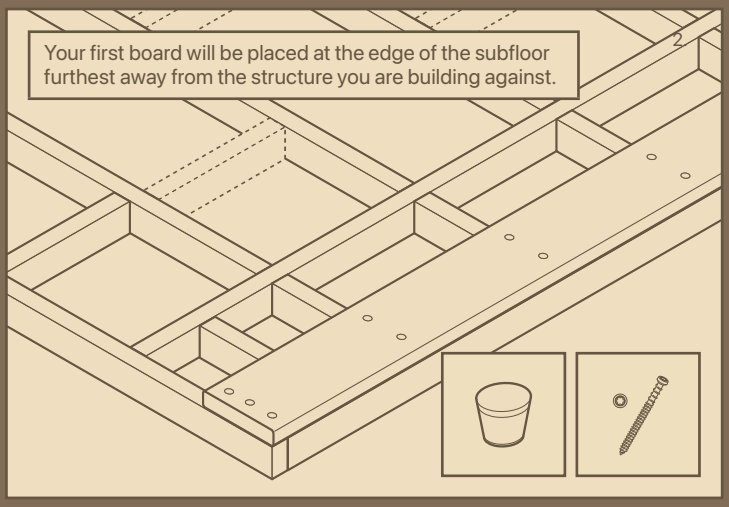

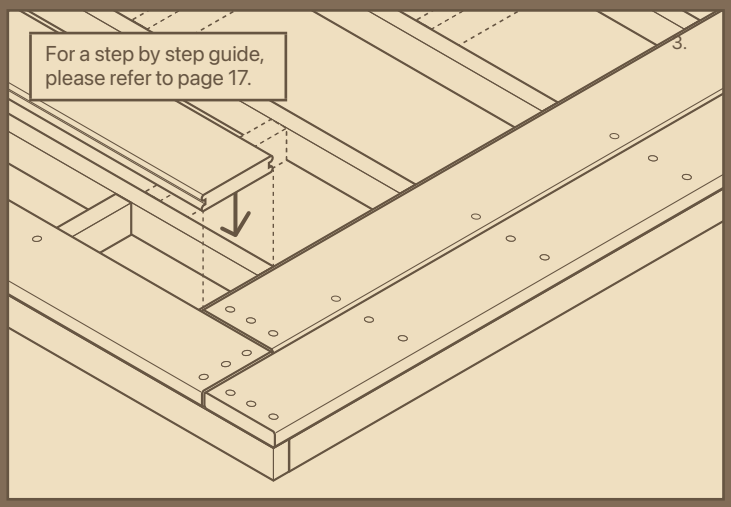

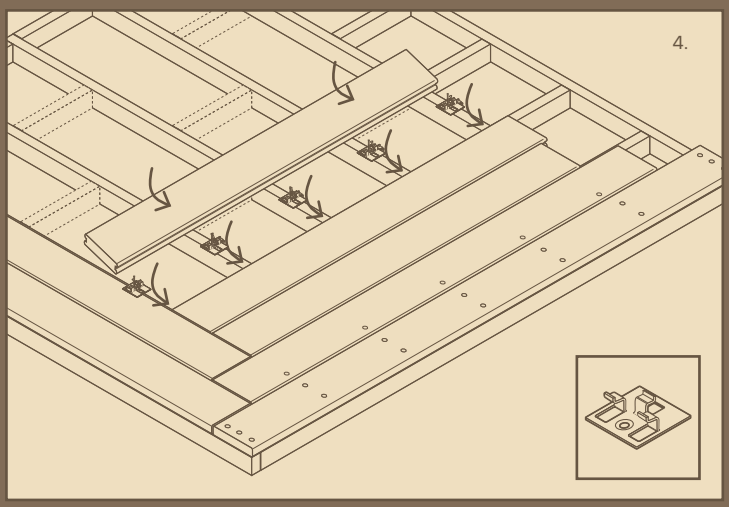

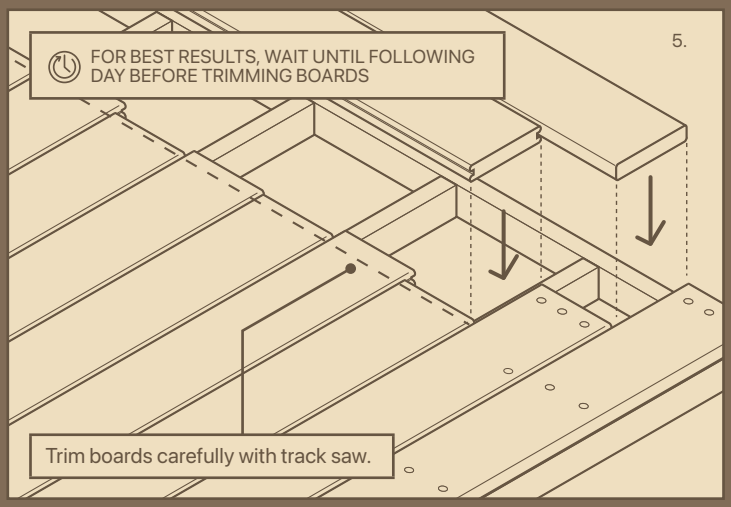

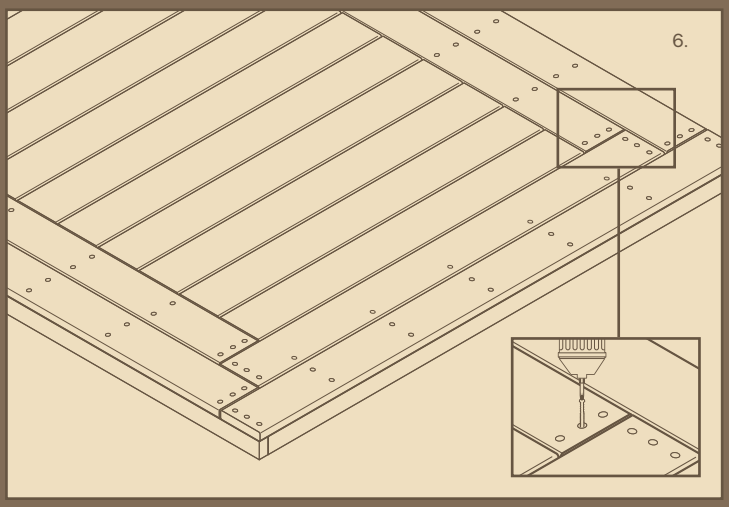

FINAL BOARD INSTALLATION

The final board will be placed at the edge of the subframe closest to the structure you are building against.

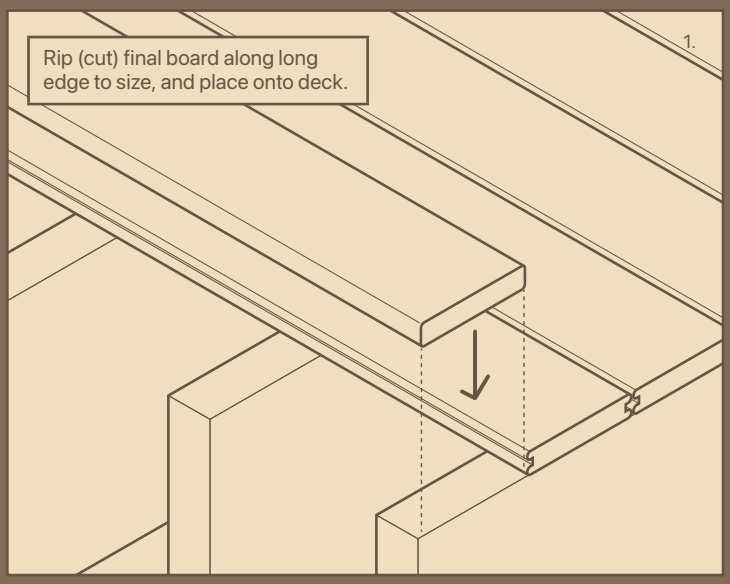

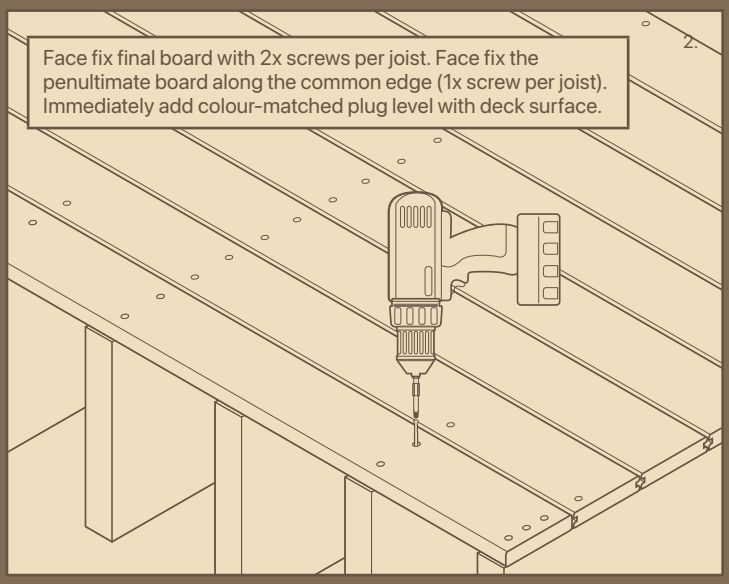

FASCIA BOARD INSTALLATION

Fascia boards are used to finish the deck and hide any grooves that are visible on the edge of the deck. Fascia boards should be attached by driving screws into the subfloor. Be careful to line up the edge of the deck with the edge of the fascia.

**For full BAL-29 compliance to install Fascia Boards, please refer to Addendum A.*

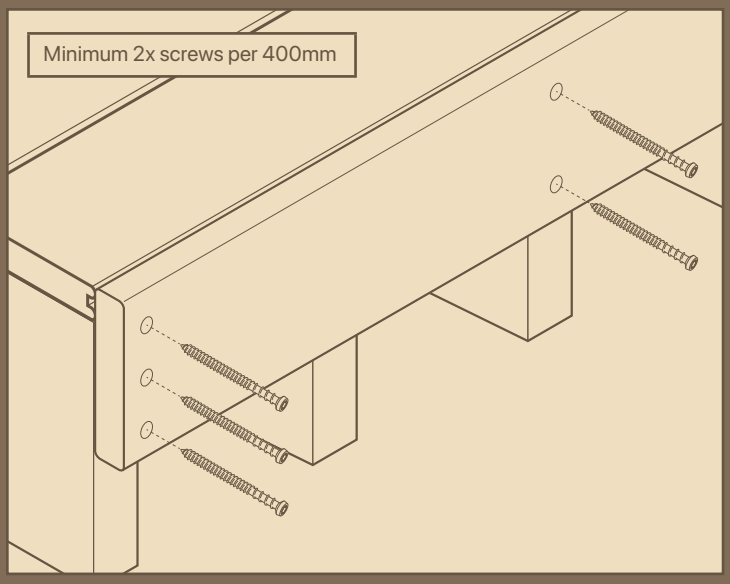

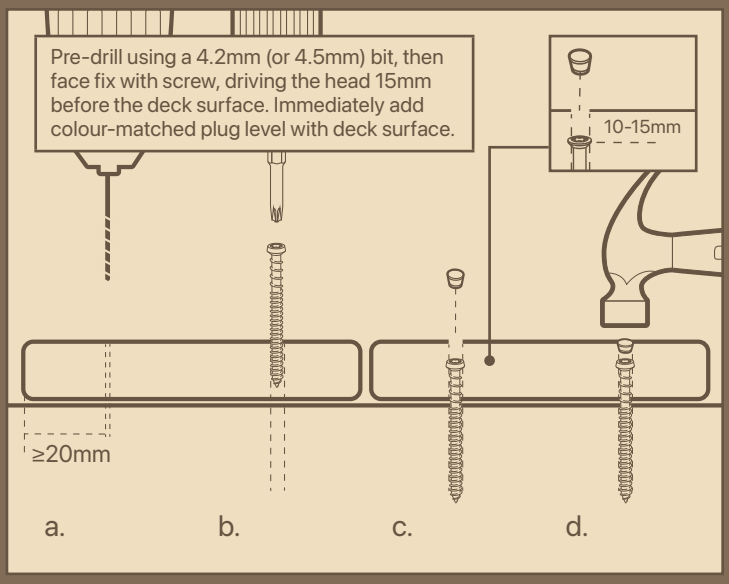

FASCIA ADDENDUM | BAL-29

THREE BAL-AA29 APPROVED FASCIA OPTIONS

For BAL-29 compliant installations, please select one of the following three fascia types:

Option 1: COLORBOND® Corrugated Iron (Metal Option)

- **Product:** 0.42 BMT COLORBOND® Roofing & Walling Corrugated Iron
- **Material:** Non-combustible steel
- **Dimensions:** Minimum 140 mm wide × 0.42 mm thick (nominal)
- **Performance:** Shields direct radiant heat exposure; non-combustible
- **Critical Installation:** Corrugated sheet must not have gaps larger than **2 mm at joints** where it meets the decking board or subfloor (per AS 3959:2018 clause 3.6)

Option 2: Galvanised Steel Flat Sheet (Metal Option)

- **Product:** Steel Flat Sheet Galvanised
- **Material:** Non-combustible steel
- **Dimensions:** Minimum 140 mm wide × 0.55 mm thick (nominal)
- **Performance:** Shields direct radiant heat exposure; non-combustible

Option 3: Merbau Hardwood (Timber Option)

- **Product:** Bushfire-resisting hardwood decking board
- **Material:** Merbau timber (AS 3959:2018 Appendix F approved)
- **Dimensions:** Minimum 140 mm wide × 25 mm thick
- Certification: Tested per AS/NZS 3837; meets bushfire-resisting timber requirements per AS 3959:2018
- **Performance:** Shields decking boards from direct radiant heat exposure

FASCIA INSTALLATION REQUIREMENTS

Positioning:

- Installed on the front face of deck, in line with top surface
- Covers and protects exposed decking board edges

Fastening - Standard (140mm width)

- Decking screws: 12g × 65 mm type 17 screws
- Spacing: Nominal 400 mm centres through mid-height of fascia board

Fastening - Wider Panels (>140mm)

- Multiple screws required at mid-height
- Vertical spacing between screws: Less than 140 mm
- Distance from top edge: Less than 70 mm
- Distance from bottom edge: Less than 70 mm

CARE & MAINTENANCE

CLEANING YOUR DECK

Use a gentle soap and water solution for regular cleaning. For more stubborn stains, use a solution of diluted white vinegar in water.

Caution:
Avoid using abrasive cleaners and solvent-based chemicals which can cause harm to the surface of the deck.

USING A PRESSURE WASHER

A pressure washer (up to 1400psi) can be used to clean the deck. Always ensure you use a wide spray setting, and keep the nozzle a safe distance from the deck surface.

Warning:
Using a concentrated or narrow spray setting, or moving the nozzle too close to the deck can cause damage to the surface of the deck.

MAINTENANCE TIPS

- Use deck furniture with non-abrasive, non-marring feet to prevent scratching the deck surface.
- Place a barrier under any grill or BBQ equipment to help protect the deck surface from heat damage. The barrier should be made of a heat-resistant material such as ceramic or fibre cement.
- Avoid placing rubber or vinyl products (such as welcome mats or planters) directly on the deck surface. In certain conditions, these materials can react with the deck surface and lead to a white stain. This stain is repairable; if this occurs, please contact your reseller.
- Avoid cutting or drilling metal on the deck, as hot metal shavings may embed into, and damage, the deck surface.

NOTES

WOOD. EVOLVED.

CONTACT US

If you require any further assistance with assembling your new WoodEvo Decking, please contact us.

NaturalTech Pty. Ltd.

Unit 1/ 8 Anzed Court,
Mulgrave VIC, 3170

1300 966 338

info@woodevo.com.au
www.woodevo.com.au