CLADDING INSTALLATION GUIDE

v2.3 - September 2026

Wood. Evolved.

CONTENTS

CLADDING PREPARATION Page 4

CARE GUIDE & MAINTENANCE Page 6

MATERIALS Page 7

INSTALLATION STEPS

CLADDING PANEL INSTALLATION Page 8-9

INNER CORNER INSTALLATION Page 10

OUTER CORNER INSTALLATION Page 10

WOOD. EVOLVED.

WELCOME TO WOOD. EVOLVED.

Congratulations on your new WoodEvo CLADDING!

Your cladding has been carefully engineered to provide years of maintenance-free enjoyment for you and your family. Please follow this installation guide carefully to ensure that your cladding is correctly and safely installed.

DISCLAIMER

- The product is intended to have natural variations in colour, texture, and dimension to replicate natural products. Variation may occur from batch to batch which can be more perceptible in solid colours and more pronounced in lighter shades.
- To ensure visual consistency, WoodEvo strongly recommends that the total quantity required for a project be procured in a single order, as products of varying lengths or those purchased at different intervals are likely to originate from disparate production batches.
- It is the responsibility of the installer or purchaser to inspect all materials for batch consistency prior to installation. Please be advised that batch variations are characteristic of the manufacturing process; they do not constitute a product defect and are expressly excluded from warranty coverage
- When installing cladding, always comply with the National Construction Code, Building Code of Australia, as well as all applicable Australian Standard and local building codes.
- All instructions in this document are provided for illustration purposes only and are not intended to replace the expertise of a licensed professional.
- WoodEvo assumes no responsibility for any risks and/or liability associated with the use of WoodEvo products during construction.

SAFETY INSTRUCTIONS

- The use of personal protective equipment (PPE) and all applicable safety equipment is required during any type of construction work.
- When working with WoodEvo cladding you should always wear appropriate gloves, respiratory protection (or dust mask), long sleeves, and safety glasses.
- Standard woodworking tools can be used with WoodEvo cladding. Please ensure you take appropriate steps to ensure all tools are used safely.
- Static electricity advisory: it is normal for static electricity to occasionally build up in plastic-based products. This phenomenon is rare and is typically more noticeable in dry conditions.

HEAT & FIRE CONSIDERATIONS

WoodEvo products could potentially be damaged by contact with strong heat sources such as, but not limited to, fire, or the reflection of sunlight from energy-efficient window products. Please ensure you consider such risks when planning the location and configuration of your cladding.

CLADDING PREPARATION

STORAGE & PROTECTION OF BOARDS

- Prior to installation, ensure cladding panels are stored on a flat surface to prevent damage from falling or sliding.
- Protect cladding panels from impact with heavy and/or sharp objects before and during installation.
- Cover cladding panels with a heavy fabric (such as natural fibre canvas) when working on the cladding to avoid damage.

COLOUR & GRAIN PATTERNS

WoodEvo cladding is carefully designed to emulate the finish of real timber, which means slight variations in colour and grain pattern are deliberately added to enhance the natural appearance of the product. This effect is purely aesthetic and does not impact the functionality or durability of the cladding.

Note:
While our cladding products are engineered to be cooler to the touch when compared to other cladding materials, they will still absorb ambient heat on hot days. It is normal for them to feel warm to touch (especially darker cladding colours).

PROTECTING YOUR CLADDING

- Leave the laying of your new cladding until after all other works have been completed.
- Always cover the cladding securely during installation or nearby construction.
    I. Use a breathable material (such as natural fibre canvas) to cover the cladding, protecting it from dust, debris, and spills.
    II. Do not use rubber or plastic sheeting to cover the cladding as it may trap moisture and/or apply direct heat, risking potential damage.
    III. Fasten the cover securely, allowing for sufficient airflow to avoid moisture buildup.
- Once construction is complete, remove the cover(s) and clean the cladding thoroughly with soap and water or a pressure washer (see Care & Maintenance instructions later in this guide) to remove any leftover materials.

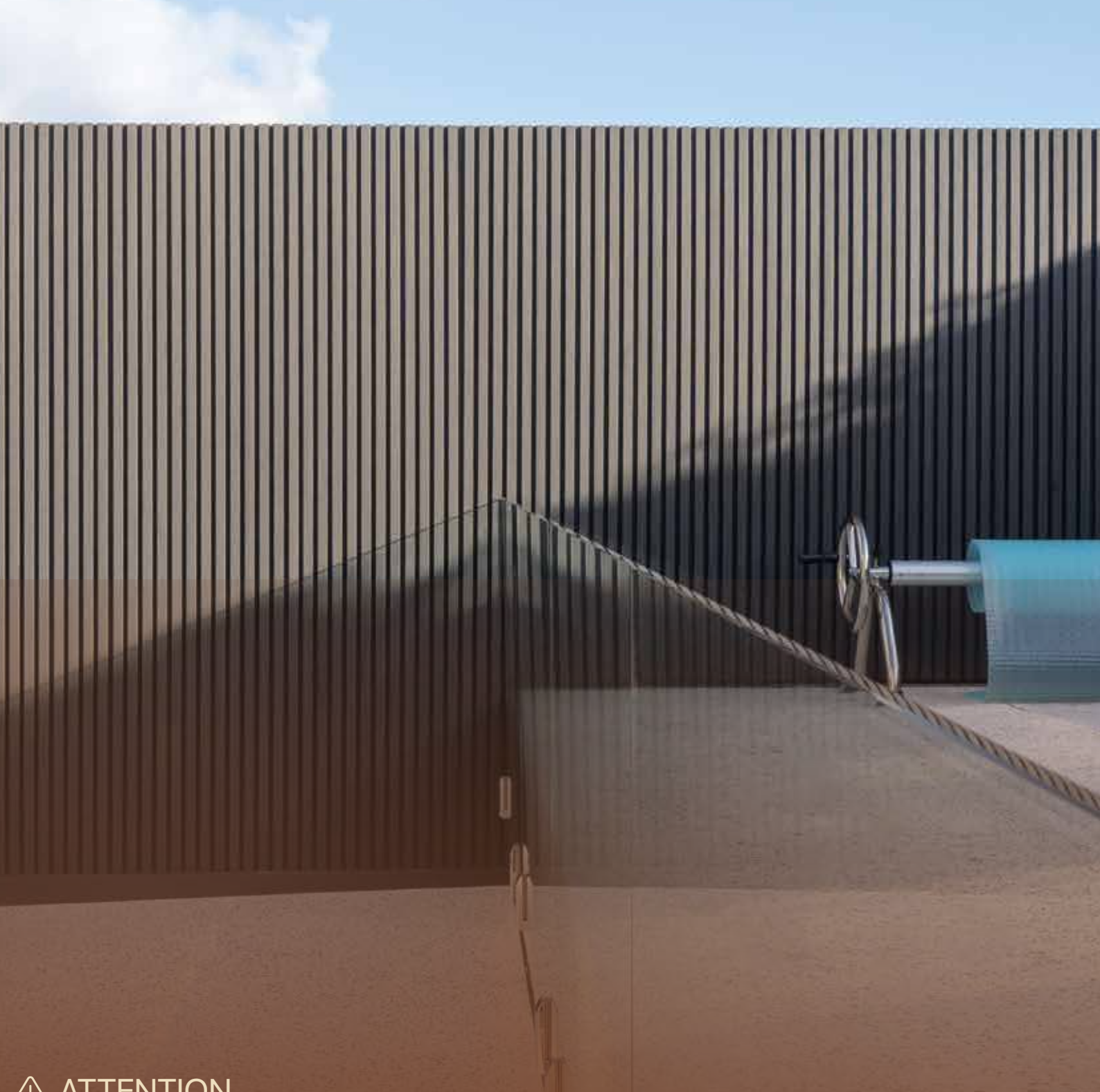

⚠ ATTENTION

Do not mark the cladding with oil pens or coloured pens. Do not use a chalk line as it may mark.

Do not use nails (or a nail gun) to affix cladding panels. This can compromise the cladding panel integrity and will void your warranty.

Only use approved screws to install your cladding. This will ensure a secure, safe, and long-lasting installation.

Always install cladding panels with the castellated side facing up.

Each cladding panel may need to be squared off. Make sure at least 1 blade width is cut from each end of the cladding board.

Panels must be installed on a minimum of 3x horizontal rails. Example: A 450mm panel with 1 rail on each end, would also require a rail in the middle.

CARE & MAINTENANCE

CLEANING YOUR CLADDING

Use a gentle soap and water solution for regular cleaning. For more stubborn stains, use a solution of diluted white vinegar in water.

Caution:
Avoid using abrasive cleaners and solvent-based chemicals which can cause harm to the surface of the cladding.

USING A PRESSURE WASHER

A pressure washer (up to 1400psi) can be used to clean the cladding. Always ensure you use a wide spray setting, and keep the nozzle a safe distance from the cladding surface.

Warning:
Using a concentrated or narrow spray setting, or moving the nozzle too close to the cladding can cause damage to the surface of the cladding.

MAINTENANCE TIPS

Ensure the cladding isn't in direct contact with any heat-producing object, for example. grill or BBQ equipment to help protect the cladding surface from heat damage.

Avoid placing rubber or vinyl products (such as plastic drop sheets) against the cladding surface. In certain conditions, these materials can react with the cladding surface and lead to a white stain. This stain is repairable; if this occurs, please contact your reseller.

Avoid cutting or drilling metal near the cladding, as hot metal shavings may embed into, and damage, the cladding surface.

MATERIALS

You will need the following fastener system components to complete your cladding installation.

BOARDS

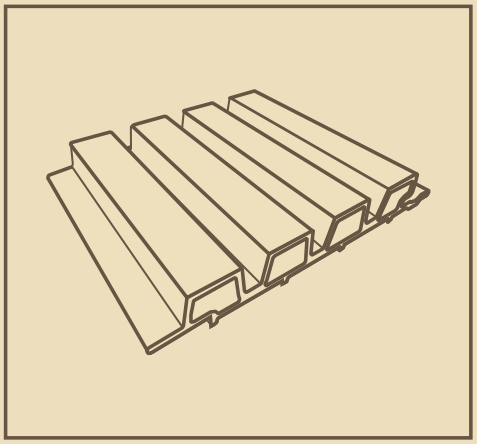

CLADDING PANEL

Dimensions: 216mm x 33mm

Coverage: 186mm

SCREWS

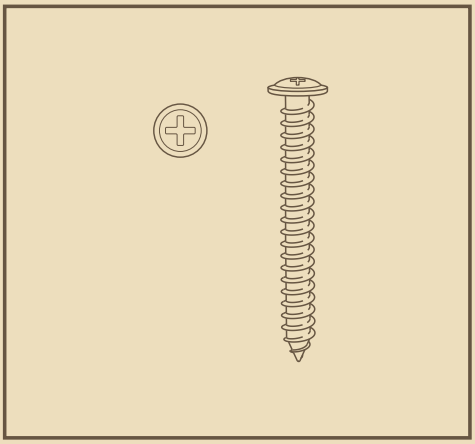

TIMBER SUBFRAME SCREWS

7g 32mm screws

T15 drive bit required

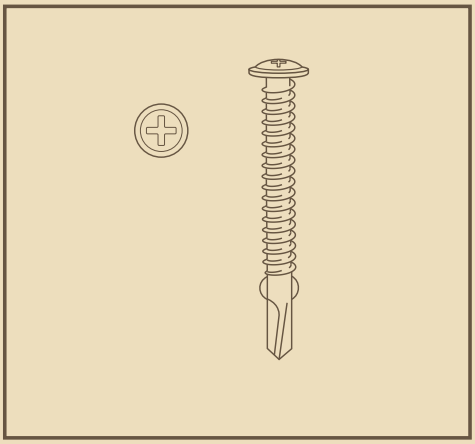

METAL SUBFRAME SCREWS

7g 32mm screws

T15 drive bit required

TRIMS

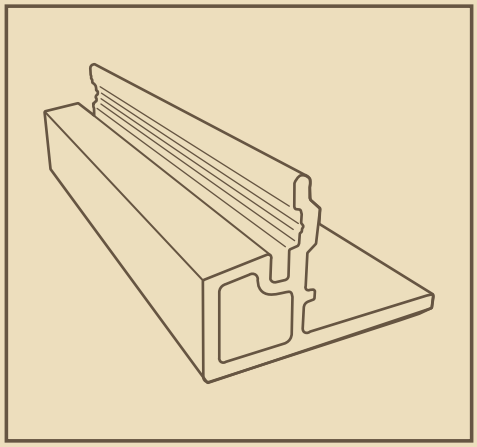

STARTER TRIM

Dimensions: 76mm x 51mm

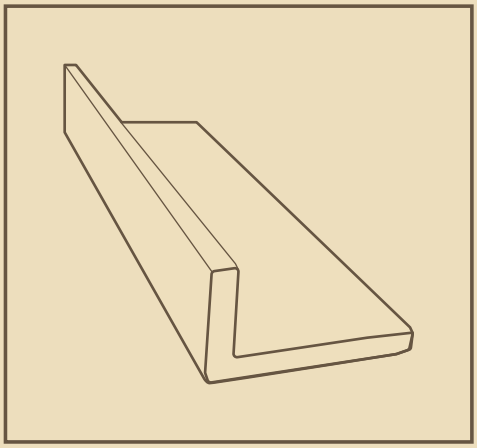

L TRIM

Dimensions: 32mm x 60mm

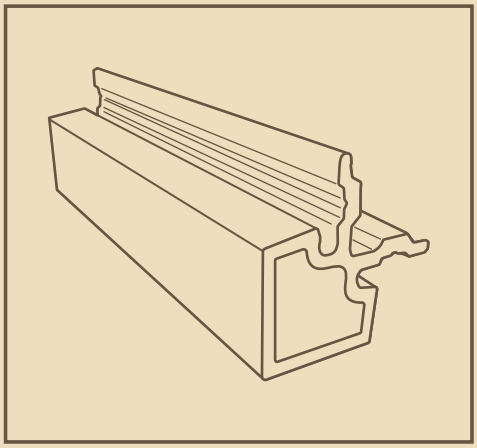

CORNER TRIM

Dimensions: 60mm x 60mm

INSTALLATION STEPS - OPTION A

L TRIM - FOR TIMBER AND METAL SUBFRAME

Installation using L Trim to start and finish on a straight wall with no corners.

1.

Ensure the horizontal rail do not exceed 500mm centres.

2.

Pre-drill 5mm into the cladding grooved channel. Make sure cladding panel is flush with subframe. Face fix first panel with 1x screw per rail.

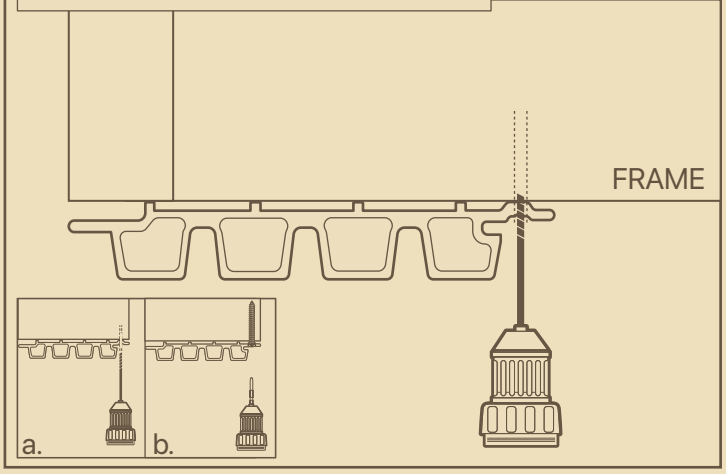

3.

Pre-drill into the longest edge of the L trim, making sure the short edge is flush with CLADDING panel. Screw L trim into rail. Face fix L Trim with 1x screw per rail.

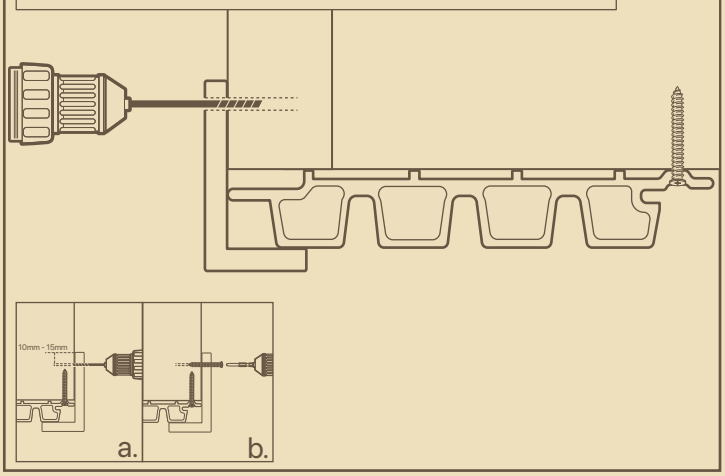

4.

On an angle, allign the straight edge of your CLADDING panel and lock into the grooved side of the installed panel. Pre-drill 5mm into cladding panel and screw into framework with 1x screw per rail.

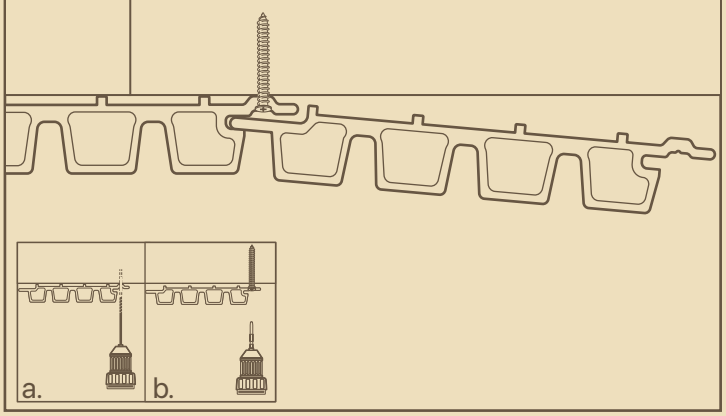

5.

Continue Step 4. until the cladding boards are completely installed. Make a rip cut where needed to ensure a perfect finish at other end of subframe. Pre-drill 5mm, then screw in L Trim to finish.

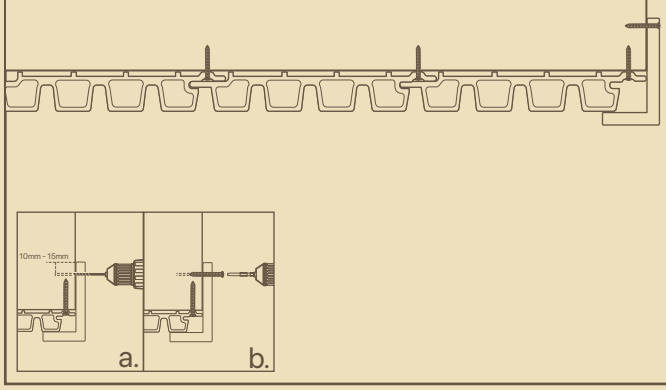

INSTALLATION STEPS - OPTION B

STARTER TRIM - FOR TIMBER AND METAL SUBFRAME

Installation using Starter trim to start and finish with an L trim on a straight wall with no corners.

1.

Ensure the horizontal rail do not exceed 500mm centres.

2.

Pre-drill 5mm into the Starter trim's grooved channel. Make sure trim is flush with subframe. Face fix trim with 1x screw per rail.

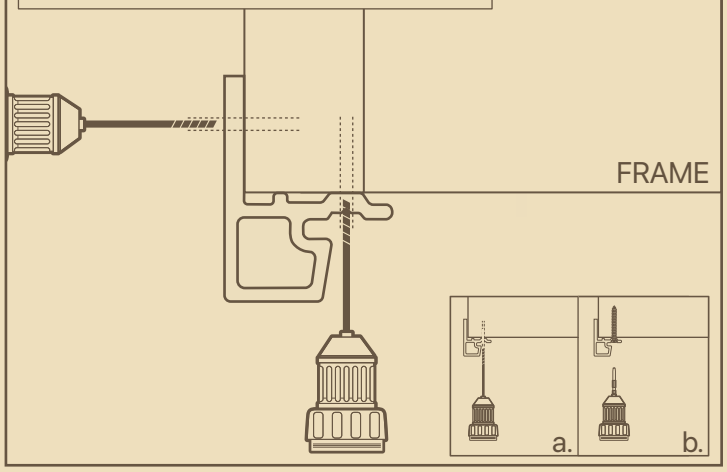

3.

On an angle, allign the straight edge of your cladding panel and lock into the grooved side of the Starter Trim. Pre-drill into cladding grooved chanel. Screw into framework with 1x screw per rail.

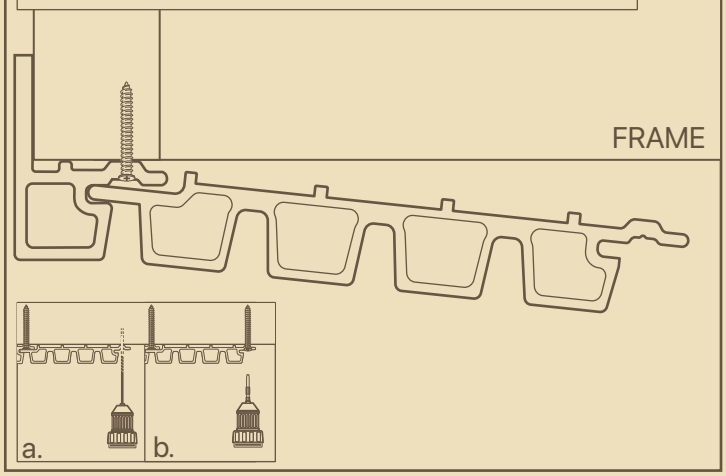

4.

Continue alligning the straight edge of your cladding panel with the grooved side of the installed panel until subframe is complete. Pre-drill into cladding panel. Screw into framework with 1x screw per rail.

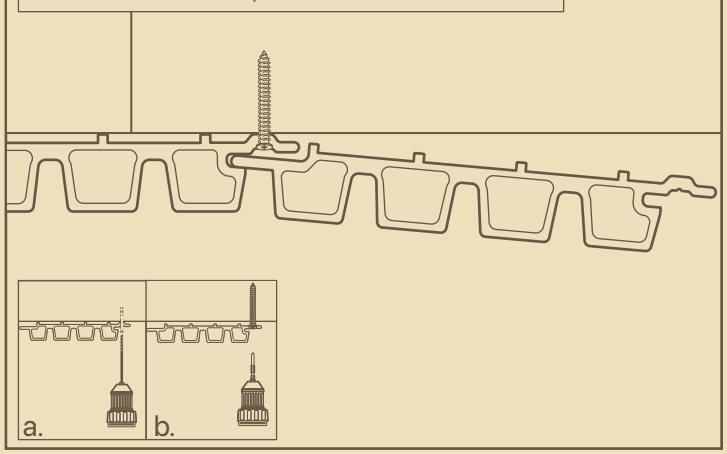

5.

Make a rip cut where needed to ensure a perfect finish at other end of subframe. Pre-drill, then screw in L Trim to finish.

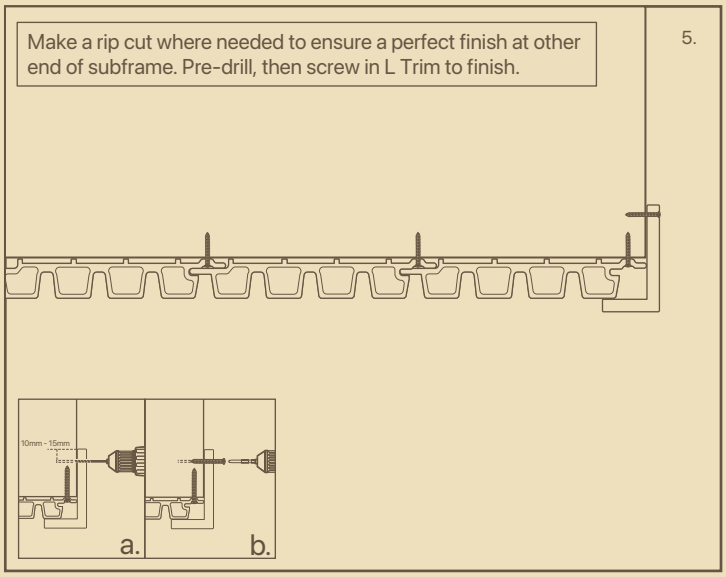

INNER CORNER INSTALLATION

STANDARD INSTALL WITH

When working with an inner corner, always start from the outside point of your wall and work your way in. When a full CLADDING panel doesn't fit perfectly, you will need to make a rip cut to allow the last panel butt joint in the corner. Making sure you allow a 3mm gap.

1. Install your Starter trim and cladding panels on one wall first before starting the other wall. You will use a L trim on the other wall.

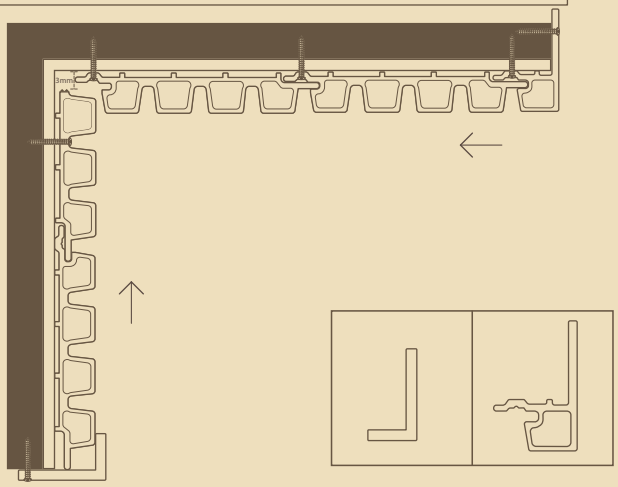

2. When you reach the internal corner, rip cut one side of the cladding panel to fit to the corner, if there is no screw channel after the cut, put screw into the last groove part of the cladding panel. Leave a 3mm gap on the ends closest to the corner.

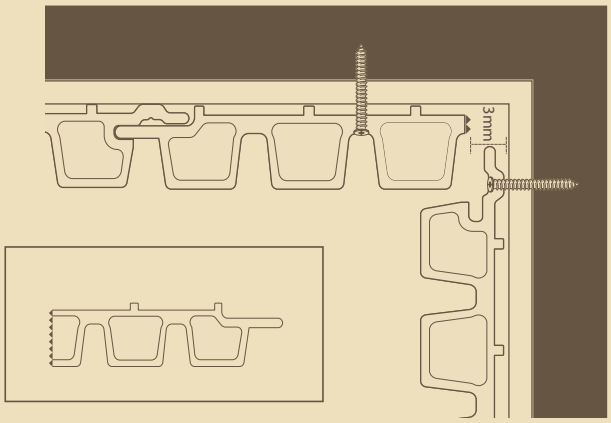

OUTER CORNER INSTALLATION

When you have an external corner in your project, always start here first and work your way from here. You will be using the Corner trim first, screwing on both grooved channels, 1x screw per horizontal support rail.

1. Where there is a rip cut with no screw channel, pre-drill and screw to smallest section of the panel. 1x screw per rail.

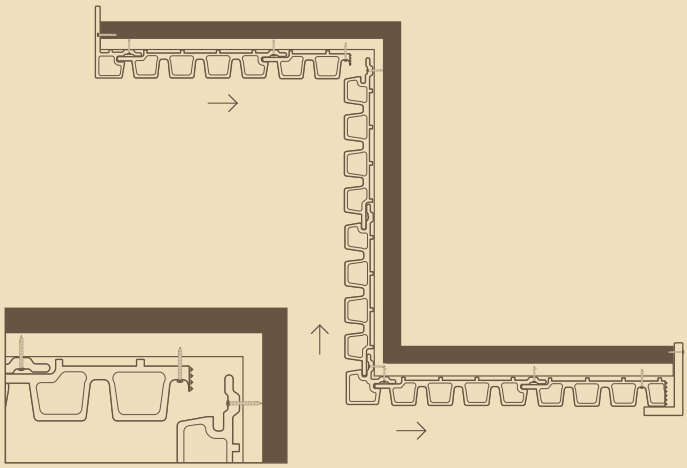

2. Where there is a rip cut with no screw channel, pre-drill and screw to smallest section of the panel. 1x screw per rail.

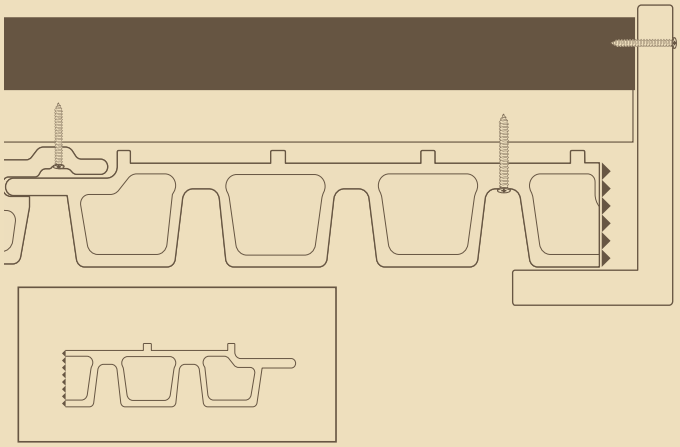

WOOD. EVOLVED.

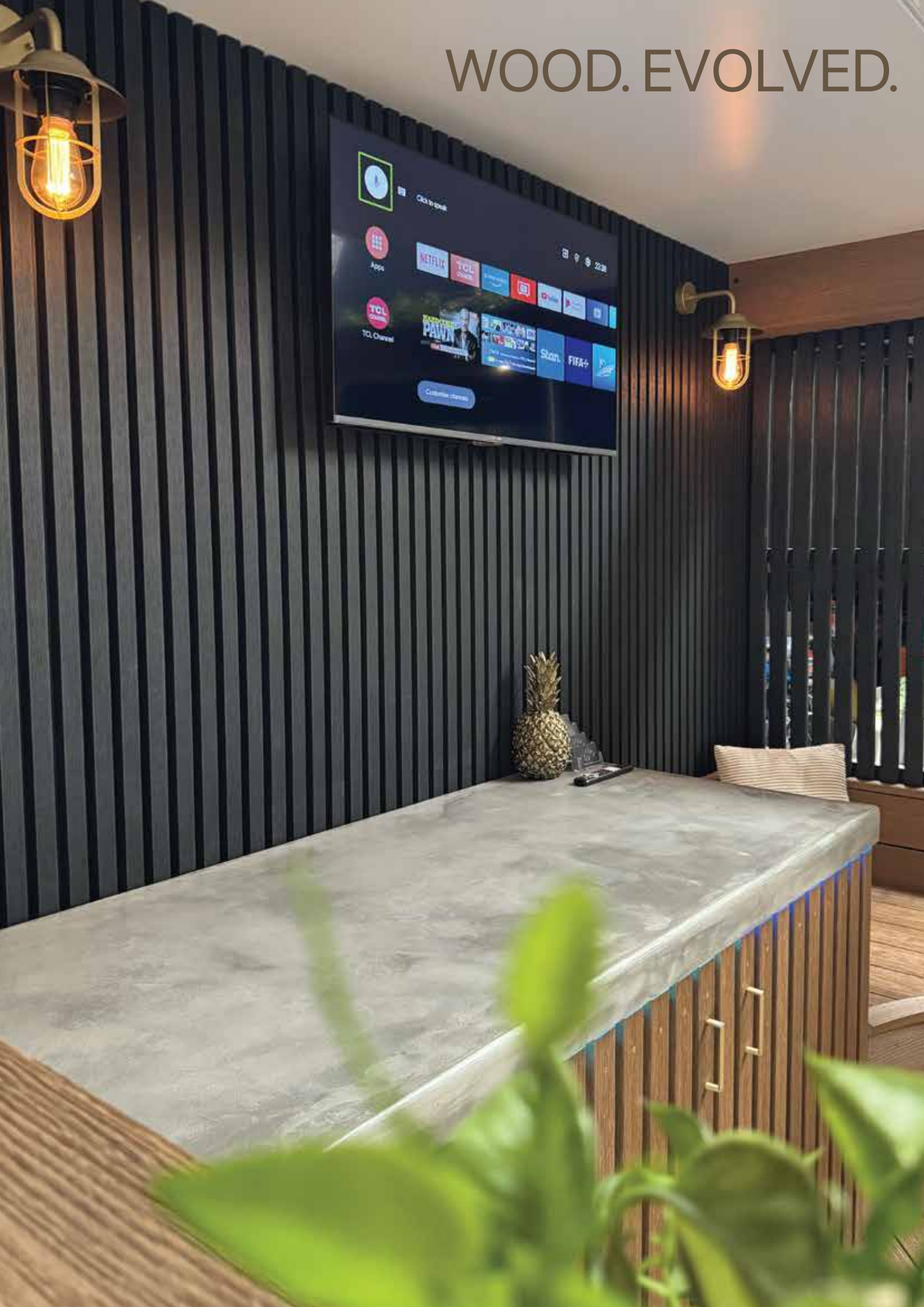

WOOD.EVOLVED.

CONTACT US

If you require any further assistance with assembling your new WoodEvo Cladding, please contact us.

NaturalTech Pty. Ltd.

Unit 1/ 8 Anzed Court,
Mulgrave VIC, 3170

1300 966 338

info@woodevo.com.au
www.woodevo.com.au