BATTEN INSTALLATION GUIDE

Version 1.0 | September 2026

Wood. Evolved.

CONGRATULATIONS ON YOUR NEW WOODEVO BATTEN PURCHASE!

Your Batten has been carefully engineered to provide years of maintenance-free enjoyment for you and your family. Please follow this installation guide carefully to ensure that your project is correctly and safely installed.

Presenting the market's first PVC Batten, combining the rustic charm of natural timber with luxury and design appeal. This innovative product features heat-resistant ASA capping, eliminating the hassle of oiling and sanding for true maintenance-free durability.

CONTENT

INTRODUCTION Page 1

DISCLAIMER & SAFETY INSTRUCTIONS Page 2

CARE & MAINTENANCE TIPS Page 3

MATERIALS Page 4

INSTALLATION BATTEN

HIDDEN SCREW INSTALLATION Page 5

SURFACE SCREW INSTALLATION Page 6

DISCLAIMER

- The product is intended to have natural variations in colour, texture, and dimension to replicate natural products. Variation may occur from batch to batch which can be more perceptible in solid colors and more pronounced in lighter shades.
- To ensure visual consistency, WoodEvo strongly recommends that the total quantity required for a project be procured in a single order, as products of varying lengths or those purchased at different intervals are likely to originate from disparate production batches.
- It is the responsibility of the installer or purchaser to inspect all materials for batch consistency prior to installation. Please be advised that batch variations are characteristic of the manufacturing process; they do not constitute a product defect and are expressly excluded from warranty coverage.
- When installing battens, always comply with the National Construction Code, Building Code of Australia, as well as all applicable Australian Standard and local building codes.
- All instructions in this document are provided for illustration purposes only and are not intended to replace the expertise of a licensed professional.
- WoodEvo assumes no responsibility for any risks and/or liability associated with the use of WoodEvo products during construction.

SAFETY INSTRUCTIONS

- The use of personal protective equipment (PPE) and all applicable safety equipment is required during any type of construction work.
- When working with WoodEvo battens you should always wear appropriate gloves, respiratory protection (or dust mask), long sleeves, and safety glasses.
- Standard woodworking tools can be used with WoodEvo battens. Please ensure you take appropriate steps to ensure all tools are used safely.
- Static electricity advisory: it is natural for static electricity to build up in plastic-based products. This phenomenon is rare and is typically more noticeable in dry conditions.

HEAT & FIRE CONSIDERATIONS

WoodEvo products could potentially be damaged by contact with strong heat sources such as, but not limited to, fire, or the reflection of sunlight from energy-efficient window products. Please ensure you consider such risks when planning the location and configuration of your battens.

CARE & MAINTENANCE

CLEANING YOUR BATTENS

Use a gentle soap and water solution for regular cleaning. For more stubborn stains, use a solution of diluted white vinegar in water.

Caution:
Avoid using abrasive cleaners and solvent-based chemicals which can cause harm to the surface of the batten.

USING A PRESSURE WASHER

A pressure washer (up to 1400psi) can be used to clean the battens. Always ensure you use a wide spray setting, and keep the nozzle a safe distance from the batten surface.

Warning:
Using a concentrated or narrow spray setting, or moving the nozzle too close to the batten can cause damage to the surface of the batten.

MAINTENANCE TIPS

Ensure the batten isn't in direct contact with any heat-producing object, for example. grill or BBQ equipment to help protect the batten surface from heat damage.

Avoid placing rubber or vinyl products (such as plastic drop sheets) against the batten surface. In certain conditions, these materials can react with the batten surface and lead to a white stain. This stain is repairable; if this occurs, please contact your reseller.

Avoid cutting or drilling metal near the battens, as hot metal shavings may embed into, and damage, the batten surface.

MATERIALS

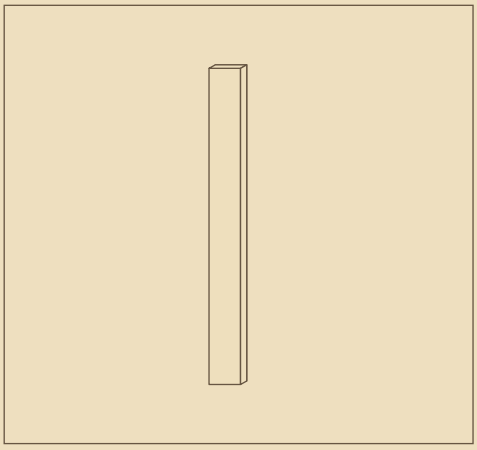

BATTEN
Dimensions: 50mm x 25mm

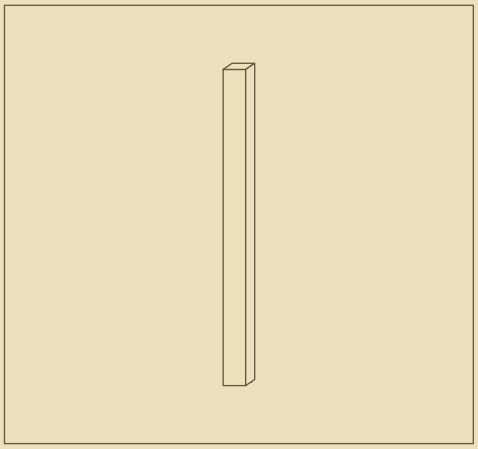

BATTEN
Dimensions: 40mm x 30mm

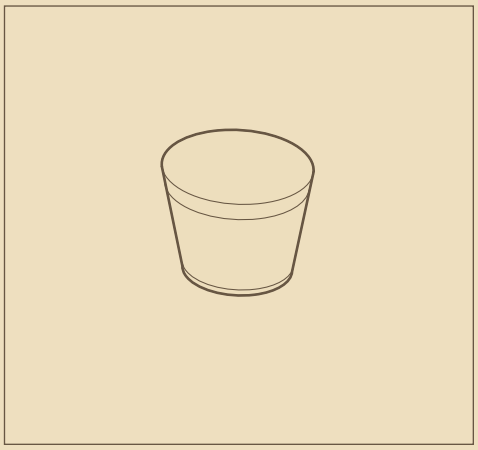

COLOUR MATCHING PLUGS

HIDDEN SCREW INSTALLATION

TIMBER AND METAL SUB-FRAME SCREWS

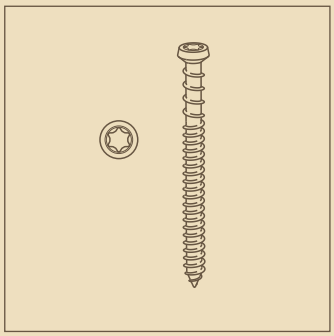

316 Stainless Steel
Non-Coloured
Timber Screws
12g x 65mm (T20 Bit)

To be used with colour matching plugs

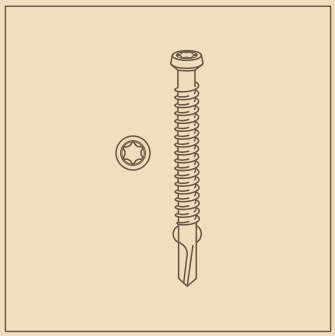

410 Stainless Steel
Non-Coloured
Metal Screws
12g x 45mm (T20 Bit)

To be used with colour matching plugs

SURFACE SCREW INSTALLATION

TIMBER SUB-FRAME ONLY SCREWS

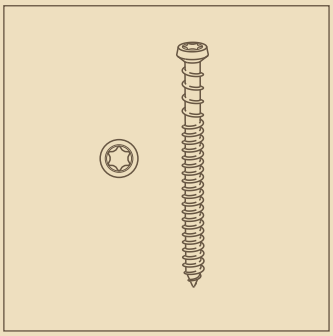

316 Stainless Steel Colour
Matching Timber Screws
12g x 65mm (T20 Bit)

(Surface screw application)

INSTALLATION BATTEN

HIDDEN SCREW INSTALLATION

1.

Ensure the horizontal supports do not exceed 600mm centres.

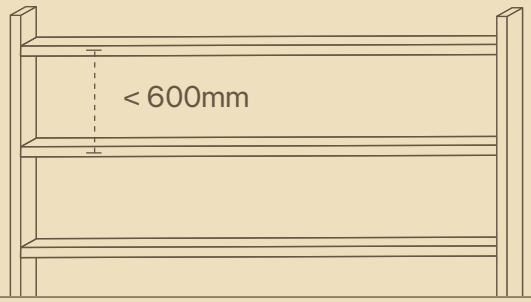

2.

Pre-drill your batten with a 5mm drill bit. Making sure the hole aligns with your rail/frame.

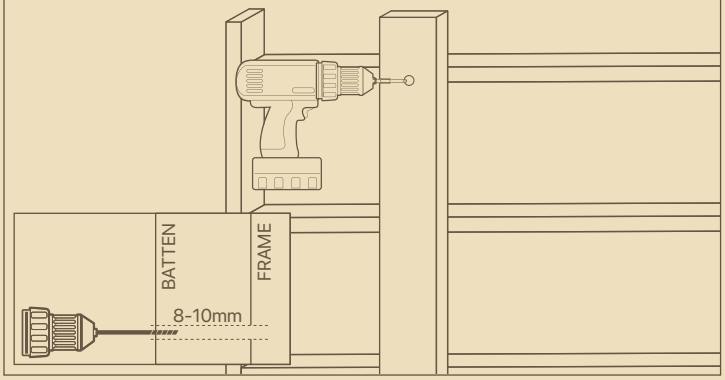

3.

Drive the screw so the head is embedded 8-10mm under the Batten's surface.

Make sure one screw is used per rail to avoid damaging the battens. Follow drill instructions in Step 2.

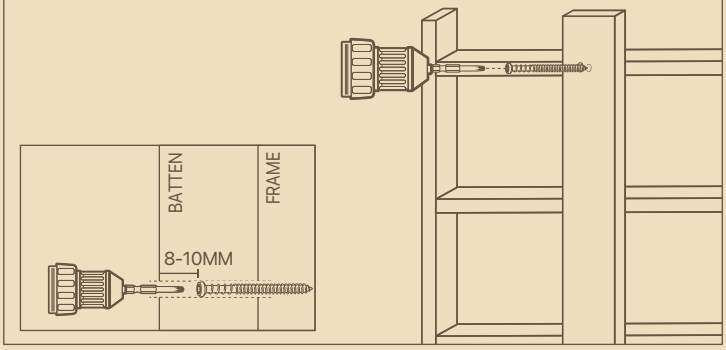

4.

Gently push or tap the plug into the screw hole. Immediately add colour-matched plug level with Batten surface. For best results, use a small headed hammer or mallet.

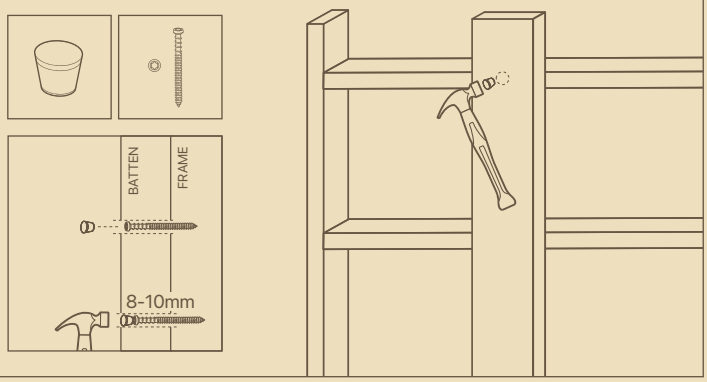

5.

Final look

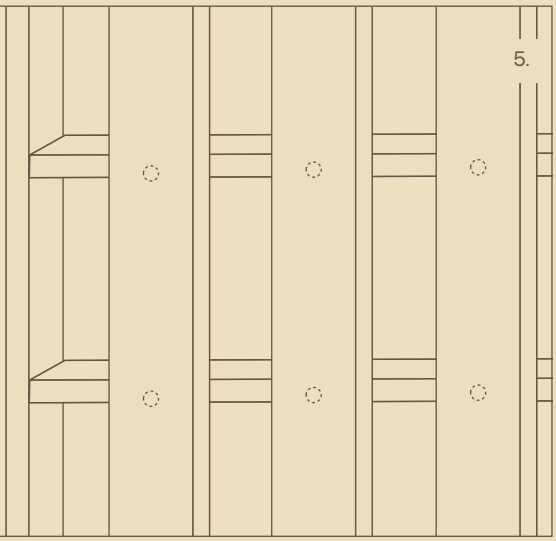

SURFACE SCREW INSTALLATION

1.

Ensure the horizontal supports do not exceed 600mm centres.

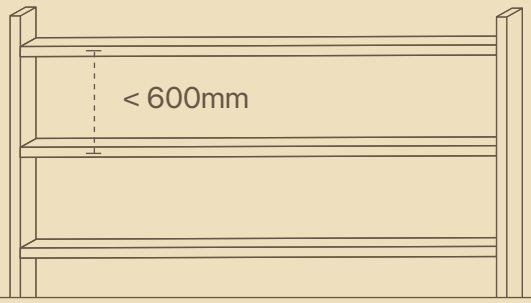

2.

Pre-drill your batten with a 5mm drill bit.
Making sure the hole aligns with your rail/frame.

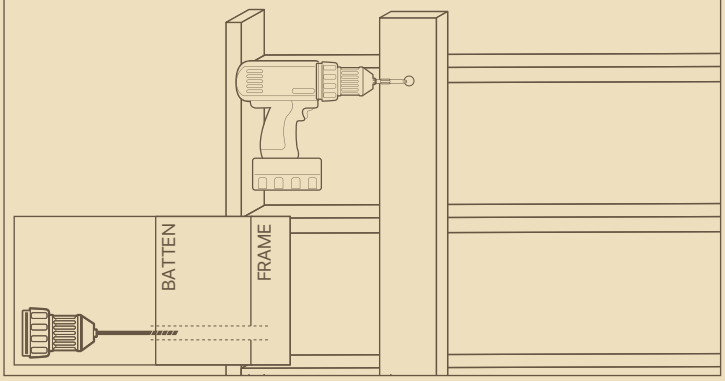

3.

Drive the screw to finish flush with the Batten surface.
Make sure one screw is used per rail to avoid damaging the battens. Follow drill instructions in Step 2.

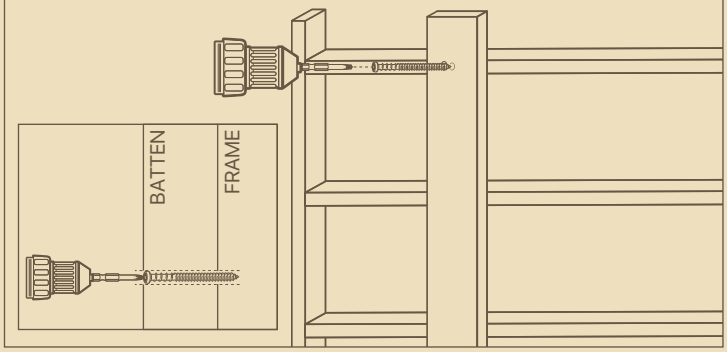

4.

Final look

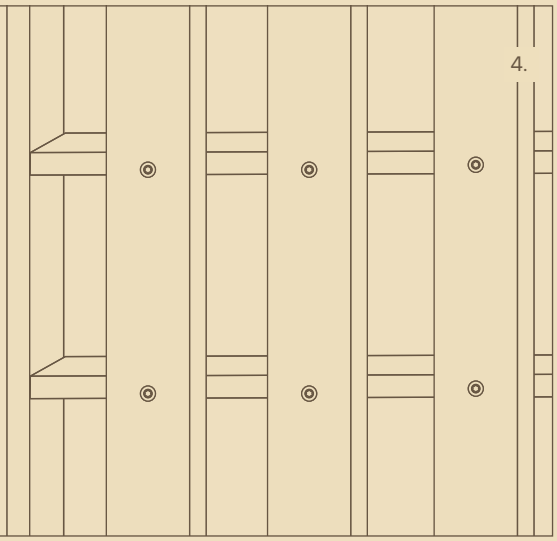

WOOD.EVOLVED.

CONTACT US

If you require any further assistance with assembling your new WoodEvo Battens, please contact us.

NaturalTech Pty. Ltd.

Unit 1/ 8 Anzed Court,
Mulgrave VIC, 3170

1300 966 338

info@woodevo.com.au
www.woodevo.com.au